SISO

GLASS

fittings

- high quality furniture fittings

SISO DENMARK

The technical descriptions and dimensions in this catalogue, also those with the photographs and drawings, are not binding. We reserve the right to make design improvements.

We bear no liability for any misprints or other errors that might occur in the production of the catalogue.

SISO A/S tager forbehold for trykfejl samt ændringer i produktets specifkationer.

Für Druckfehler und Irrtümer ist jede Haftung ausgeschlossen. Produktänderungen behalten wir uns vor.

SISO DENMARK

- high quality furniture fittings

SISIO A/S
MILEPARKEN 11
DK - 2740 SKOVLUNDE
(COPENHAGEN)
DENMARK
PHONE: (+45) 45 830 900
FAX: (+45) 45 830 444

DISTRIBUTOR

CONTENTS

- high quality furniture fittings

GLASS CONNECTORS 3-6

GLASS DOOR LOCK & ACCESSORIES 7-22

SHELF SUPPORTS FOR GLASS 23-27

CABLE SIGN SYSTEM 28-29

ADJUSTABLE SHELF SUPPORT „PELICANS“ 30-31

GLASS CLAMPS 32-38

BALUSTER POSTS 39

MAGNETIC TOUCH LATCHES 40

STRIKING PLATES 41

GLASS DOOR HINGES - DRILLING 42-50

BUTT HINGES FOR UV-GLUE 51

GLASS PIVOT HINGE - NO DRILLING 52-54

GLASS DOOR HINGES - NO DRILLING 54-56

GLASS DOOR HANDLE - NO DRILLING 57

CONTENTS

GLASS DOOR PULL F/SLIDING DOORS	57	
ACCESSORIES F/MIRRORS	58-59	
SIGNBOARD SCREWS & HOLDERS	60-61	
SUCTION PADS & BUMPERS	62	
TABLE LEG F/GLASS TABLE TOPS	62	
SHELVING LEG SYSTEM „THE POST“	63	
SAUNA HINGES F/WOODEN & GLASS DOORS	64-67	
ACCESSORIES F/SAUNA DOORS	67-68	
SHOWER DOOR HINGES, CLAMPS, SUPPORT BARS & ACCESSORIES, DOOR KNOBS & HANDLES	69-94	
DOOR HANDLES SS-304	95 - 97	
PVC SEALS FOR SHOWER DOORS	98	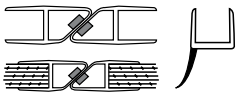
SLIDING DOOR SYSTEM F/GLASS DOORS	99	
ALUMINIUM U-CHANNELS	100	
GLASS CALCULATION	100	
SISO SAN -TOILET ACCESSORIES	101-102	
TOILET CUBICLE FITTINGS	103 -105	
FLOOR SPRINGS & PATCH FITTINGS	106 - 109	

GLASS CONNECTORS - TYPE „MAXI“
ZAMAK - GLASS THICKNESS 4-6 MM

- high quality furniture fittings

SISO DENMARK

GLASS CONNECTOR 2-WAY
90º

33 x 33 x 25 mm height

Chrome plated	# 22.10.100
Brass plated	# 22.10.101
Black anodized	# 22.10.102
Alu finish	# 22.10.103

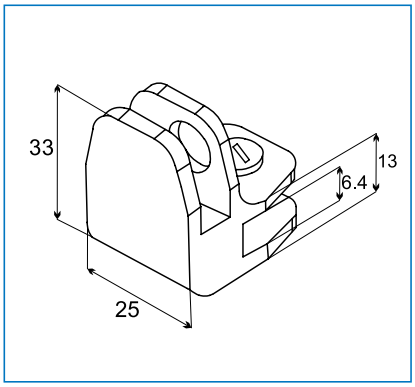

GLASS CONNECTOR 3-WAY
T-JOINT

52 x 33 x 25 mm height

Chrome plated	# 22.10.110
Brass plated	# 22.10.111
Black anodized	# 22.10.112
Alu finish	# 22.10.113

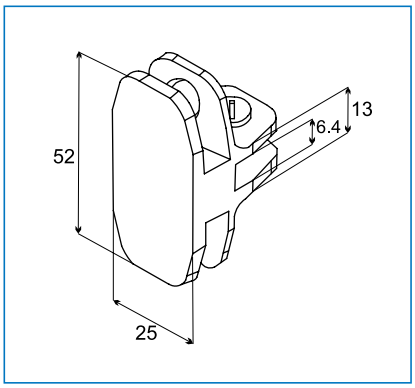

GLASS CONNECTOR 4-WAY
90º

52 x 52 x 25 mm height

Chrome plated	# 22.10.120
Brass plated	# 22.10.121
Black anodized	# 22.10.122
Alu finish	# 22.10.123

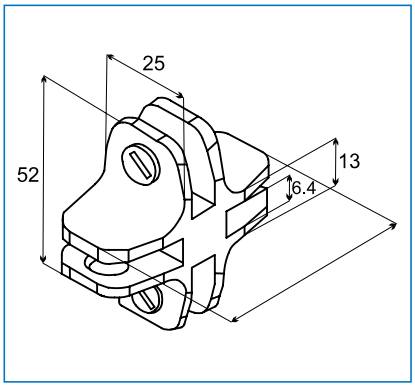

GLASS CONNECTOR 3-WAY
T-JOINT

Closed end - bottom/top connector

Chrome plated	# 22.10.130
Brass plated	# 22.10.131
Black anodized	# 22.10.132
Alu finish	# 22.10.133

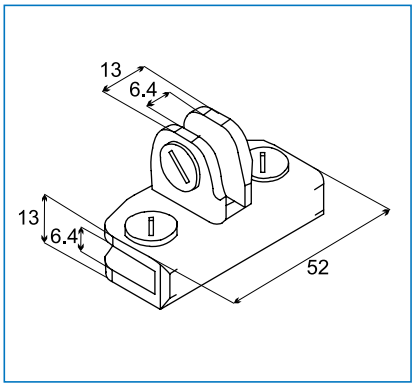

GLASS CONNECTOR 4-WAY
90º

Closed end - bottom/top connector

Chrome plated	# 22.10.140
Brass plated	# 22.10.141
Black anodized	# 22.10.142
Alu finish	# 22.10.143

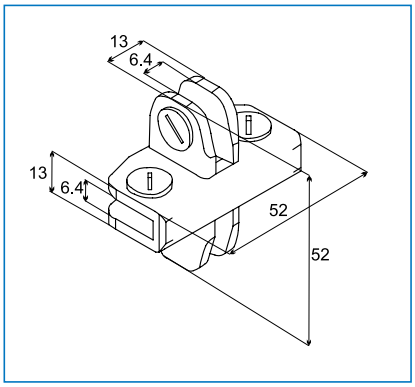

GLASS CONNECTORS - TYPE „MINI“
ZAMAK - GLASS THICKNESS 4 - 5.5 MM

GLASS CONNECTOR HINGE

60 mm open width x 40 mm height.

Chrome plated	# 22.10.010
Brass plated	# 22.10.011
Black anodized	# 22.10.012

GLASS CONNECTOR HINGE

60 mm open width x 22 mm height.

Chrome plated	# 22.10.020
Brass plated	# 22.10.021
Black anodized	# 22.10.022

GLASS CONNECTOR
2-WAY - 90º

33 x 33 mm x 22 mm height

Chrome plated	# 22.10.060
Brass plated	# 22.10.061
Black anodized	# 22.10.062

GLASS CONNECTOR
3-WAY - T-JOINT

52 x 34 mm x 22 mm height

Chrome plated	# 22.10.040
Brass plated	# 22.10.041
Black anodized	# 22.10.042

GLASS CONNECTOR
4-WAY - 90º

52 x 52 mm x 22 mm height

Chrome plated	# 22.10.050
Brass plated	# 22.10.051
Black anodized	# 22.10.052

GLASS CONNECTOR
4-WAY - 90º

52 x 52 mm x 22 mm height
bottom mounted connector

Chrome plated	# 22.10.055
Brass plated	# 22.10.056
Black anodized	# 22.10.057

WALL/GLASS & GLASS/GLASS CONNECTORS

- high quality furniture fittings

SISO DENMARK

WALL-TO-GLASS CONNECTOR 90º OUTER SIDE

Application: Connecting glass plates
Drilling required
Material: Brass, 2,1 mm thickness
Size: 62,5 x 62,5 x 40 mm
Bore hole: ø13 mm
Glass thickness: 6-8 mm
Alu finish # 22.10.065
Chrome plated # 22.10.066
Packing: 10 pcs per carton

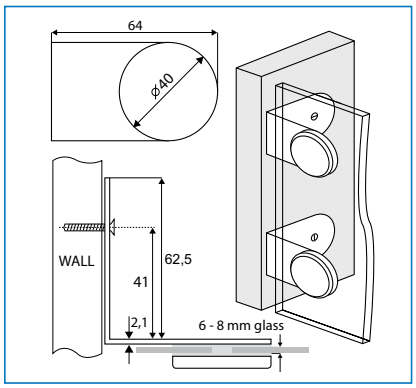

WALL-TO-GLASS CONNECTOR 90º INNER SIDE

Application: Connecting glass plates
Drilling required
Material: Brass, 2,1 mm thickness
Size: 62,5 x 62,5 x 40 mm
Bore hole: ø13 mm
Glass thickness: 6-8 mm
Alu finish # 22.10.070
Chrome plated # 22.10.071
Packing: 10 pcs per carton

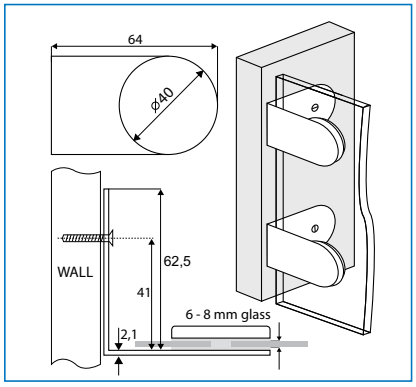

GLASS-TO-GLASS CONNECTOR 90º OUTER SIDE

Application: Connecting glass plates
Drilling required
Material: Brass, 2,1 mm thickness
Size: 62,5 x 62,5 x 40 mm
Bore hole: ø13 mm
Glass thickness: 6-8 mm
Alu finish # 22.10.075
Chrome plated # 22.10.076
Packing: 10 pcs per carton

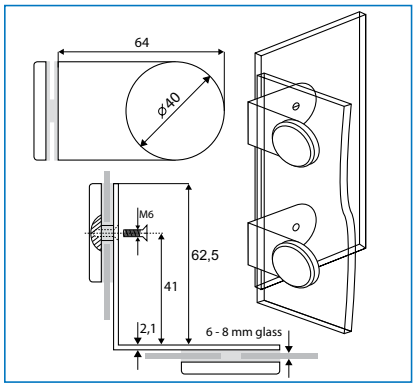

GLASS-TO-GLASS CONNECTOR 90º INNER SIDE

Application: Connecting glass plates
Drilling required
Material: Brass, 2,1 mm thickness
Size: 62,5 x 62,5 x 40 mm
Bore hole: ø13 mm
Glass thickness: 6-8 mm
Alu finish # 22.10.080
Chrome plated # 22.10.081
Packing: 10 pcs per carton

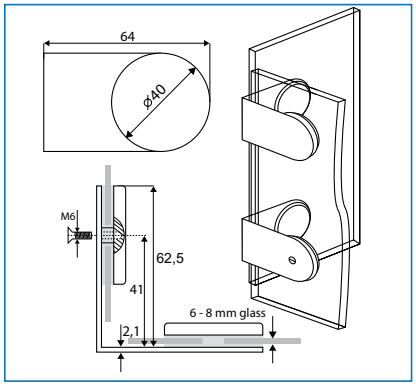

GLASS-TO-GLASS CONNECTOR 180º

Application: Connecting glass plates
Drilling required
Material: Brass, 2,1 mm thickness
Size: 125 x 40 mm
Bore hole: ø13 mm
Glass thickness: 6-8 mm
Alu finish # 22.10.085
Chrome plated # 22.10.086
Packing: 10 pcs per carton

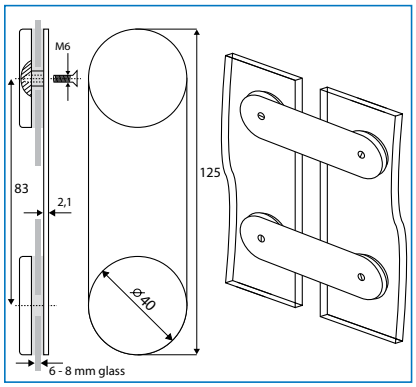

GLASS/GLASS CONNECTOR #CLAW" 2-WAY

Application
Connecting glass plates
Drilling required

Material
2 mm steel, nickel plated

Size: 35 x 35 mm
Bore hole: ø 6 mm
Bore distance: 25 mm from centre to edge
Glass thickness: 4 - 8 mm

Item No.: # 22.10.090

Inclusive transparent tube & washers

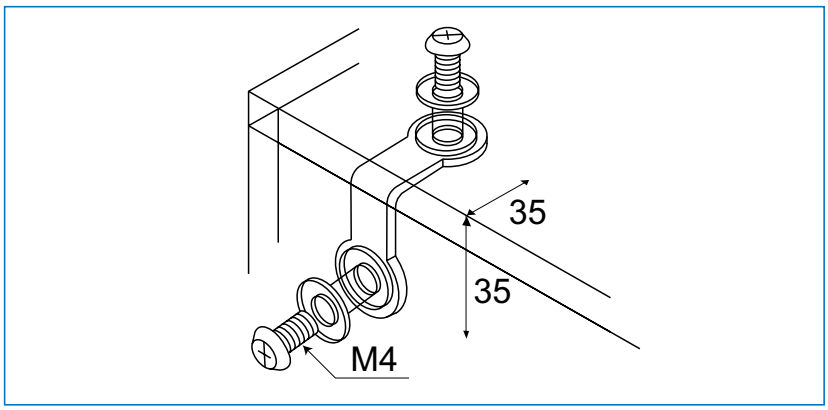

GLASS/GLASS CONNECTOR #CLAW" 3-WAY

Application
Connecting glass plates
Drilling required

Material
2 mm steel, nickel plated

Size: 35 x 35 x 35 mm
Bore hole: ø 6 mm
Bore distance: 25 mm from centre to edge
Glass thickness: 4 - 8 mm

Item No.: # 22.10.091

Inclusive transparent tube & washers

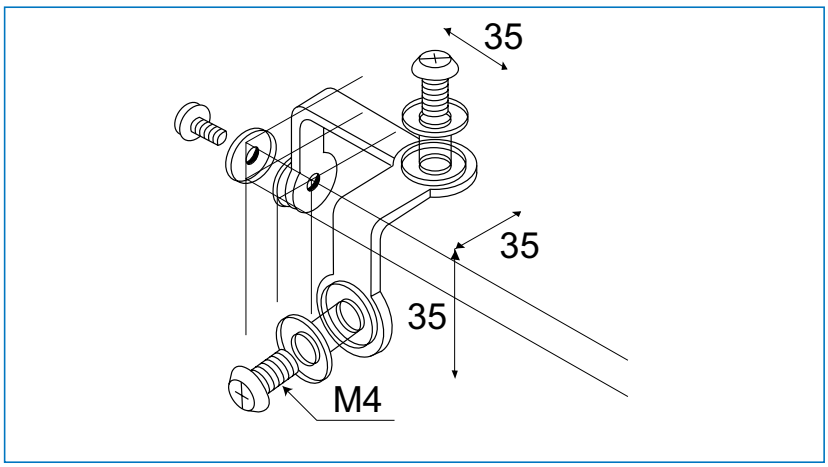

GLASS DOOR LOCK „MINI“
SLIDING DOORS

- high quality furniture fittings

MODEL „MINI“

Finish
Chrome plated

Aplication
Glass sliding door

Accesories for 1 set
1 lock
2 car keys
1 nut

Function
to lock - push the cylinder
to unlock - turn key

200 key combinations # 14.03.040
key alike # 14.03.041

Options
15 000 key combinations

Packing
100 pcs per box
5 box per export carton

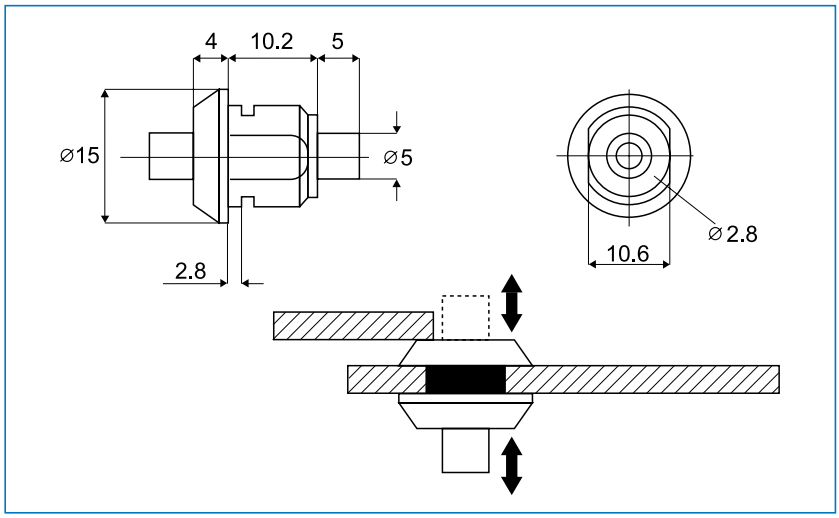

BRASS GLASS DOOR LOCK „SWAN“ FOR 8-10 MM GLASS

MODEL „SWAN“

Finish
Gold plated # 14.09.000
Chrome plated # 14.09.001

Material
Brass

Consists of:
1 cylinder ø20 x 23 mm
1 front plate w/bottom support
40 x 40 mm
1 back plate 40 x 40 mm
2 SISO metal keys, key alike
2 transparent cushions
1 hexagonal nut
1 off-set brass cam
1 raised brass striker

Function
Turn key 180º to lock or unlock

Packing
100 pcs per export carton

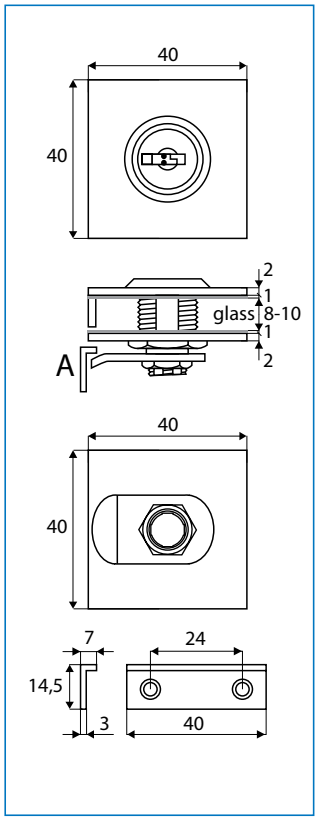

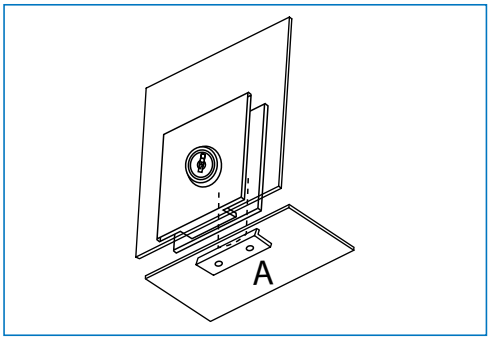

GLASS DOOR LOCK „AUDIO“ - NO DRILLING

MODEL „AUDIO“

Finish
Plastic black # 14.09.256

Application
Hinged glass doors
particularly for audio/hi-fi cabinets
No boring required

Accessories for one set
1 lock
1 washer
2 screws
2 keys

Function
Turn key 180º
to lock or unlock

Specification
Plastic/metal combination
one key change only

Packing
500 pcs per export carton

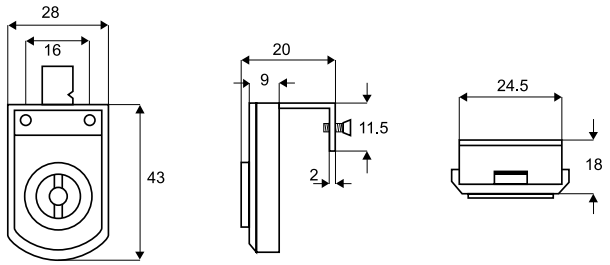

GLASS DOOR LOCK #409 SLIDING DOORS

MODEL # 409

Finish
Brass, chrome plated

Application
Glass sliding doors

Accessories for one set
1 plug - in cylinder
1 housing (2 parts)
2 rubber washers
2 screws
2 keys

Function
Place cylinder into lock case,
turn and remove key,
key removable in locked
position only

Specification
Brass lock
25 key combinations # 14.09.300
or key alike # 14.09.315

Packing
500 pcs per export carton
25 pcs per box

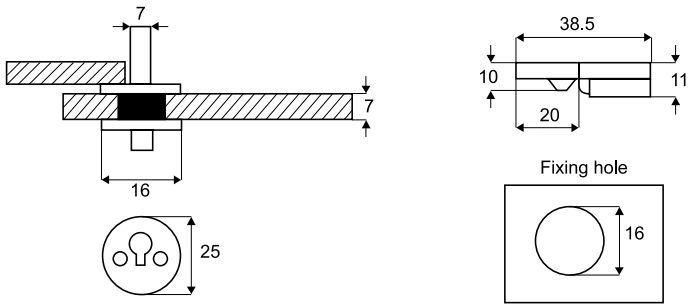

GLASS DOOR LOCK VITRIO „M“
- HINGED DOORS

- high quality furniture fittings

MODEL „VITRIO“

Finish

Chrome plated	# 14.09.350
Alu finish	# 14.09.352
Gold plated	# 14.09.353
Black anodized	# 14.09.351
Brass plated	# 14.09.360

Application
Double hinged glass doors
Accessories for one set
A) left door
1 decorative cylinder
1 stainless steel front plate
1 hexagonal nut
1 plastic washer
B) right door
1 off-set hook cam
1 stainless steel front plate
1 hexagonal nut
1 plastic washer
2 car keys

Function
Turn key 90º to lock
or unlock

Specification
Cylinder zamak
front plates stainless steel
400 key combinations or key alike

Option
Master key system

Packing
300 pcs per export carton
25 pcs per box

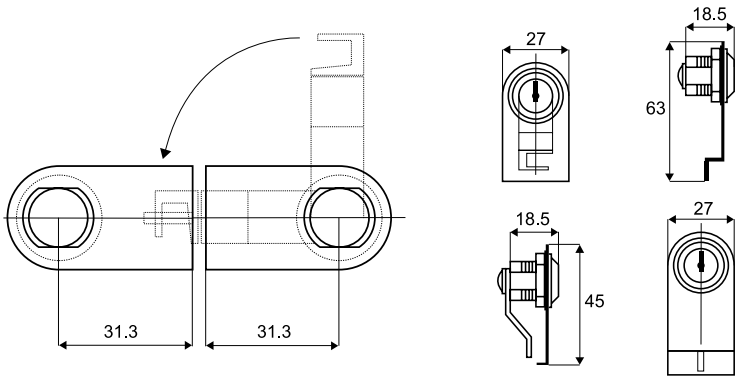

GLASS DOOR LOCK # X-750
- NO DRILLING

MODEL X-750

Finish

Chrome plated - 100 mm	# 14.09.025
Chrome plated - 132 mm	# 14.09.030
Chrome plated - 135 mm	# 14.09.029

Application
Glass sliding doors

Accessories for one set
1 removable lock
1 ratchet 100 or 132 mm
1 screw w/protection pad
2 metal keys

Function
Mount ratchet into lock with flat
end facing the fastening screw
(see illustration).
Turn key 180º and remove key
to activate the lock

Specification
Zamak lock
Ratchet steel
25 key combinations

Option
Master key or key alike

Packing
240 pcs per export carton
12 pcs per box

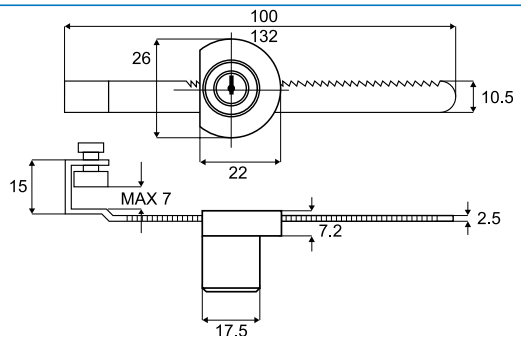

PUSH BUTTON LOCK #8600 „M“
F/DOUBLE SLIDING GLASS DOORS

MODEL # 8600
Finish
Chrome plated # 14.09.420
Alu finish # 14.09.423
Chrome w/Master key # 14.09.422
Application
Double sliding glass doors
on alu rails
Accessories
1 lock cylinder 22 mm
1 grub screw for fastening
2 metal keys, double entry
Function
Push cylinder to lock
Turn key to unlock
Specification
Zamak house: 28 x 24 x 12 mm
400 key combinations or key alike
Option:
Master key
Packing:
250 pcs per export carton
25 pcs per box

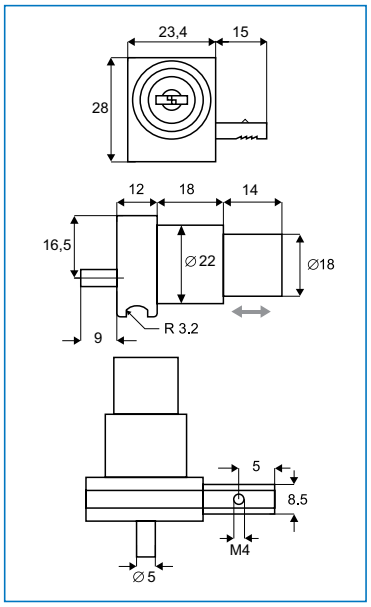

ACCESSORIES

BOTTOM TRACK
Aluminium:
Anodized # 22.26.030
Standard length: 2 metres

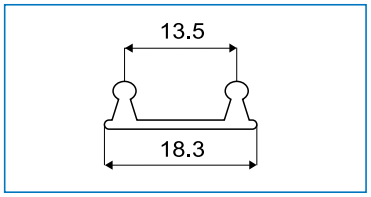

TOP E-TRACK
Aluminium:
Anodized # 22.26.010
Standard length: 2 metres

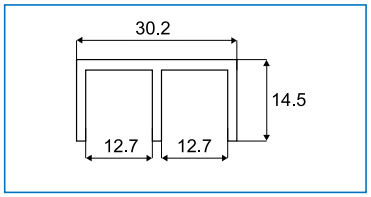

GLASS H-RAIL
Aluminium:
Anodized # 22.26.020
Standard length: 2 metres
For 5 - 6 mm glass thickness

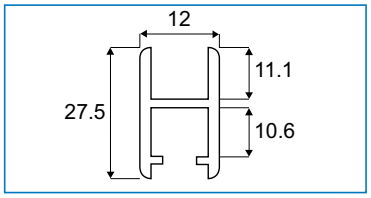

TROLLEY w/Nylon Wheels
Nickel plated # 22.26.040
Load capacity: 3 kg

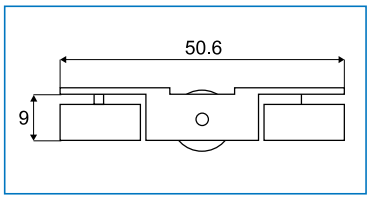

U-SPLINE PLASTIC # 22.26.060
Rolls of 100 mts

SILENCER # 22.26.070
Plastic, clear
Bags of 100 pcs

END CAP ZAMAK
Chrome plated # 22.26.050
Alu finish # 22.26.049

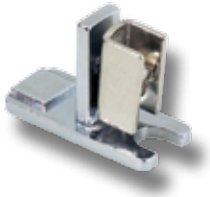

PUSH BUTTON LOCK #2010 „M“
F/DOUBLE SLIDING GLASS DOORS

- high quality furniture fittings

SISO DENMARK

MODEL #2010

Finish
Alu finish # 14.09.460
Chrome plated # 14.09.461
Gold mat plated # 14.09.463
Gold bright plated # 14.09.462

Application
Double sliding glass doors
premounted on aluminium frame

Accessories for one set
1 cylinder push lock ø22 mm
1 universal bottom part
premounted for insertion
into H-rail on left or right side
2 grub screws for fastening onto the h-rail
5 allen keys for every
20 lock sets for tightening the grub
screws
2 car keys, double entry

Function
Push cylinder to lock
and turn key to unlock

Specification
Zamak with 400 key combinations
or key alike

Option
Master key system

Packing
200 pcs per export carton
20 pcs per box

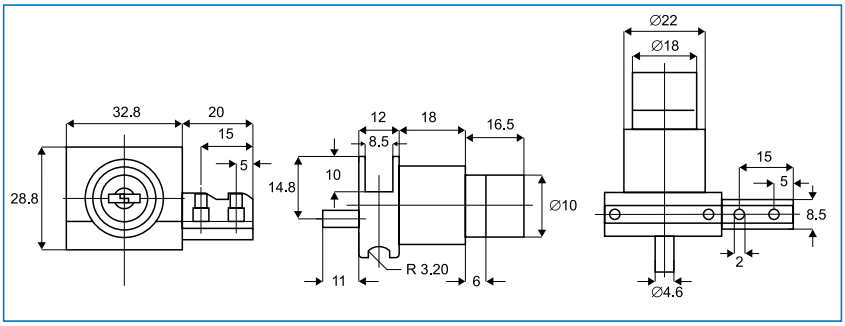

ACCESSORIES

U-SPLINE PLASTIC
22.26.060
Rolls of 100 mts

SILENCER
22.26.070
Plastic, clear
Bags of 100 pcs

END CAP ZAMAK
Chrome plated
22.26.051
Alu finish
22.26.052

BOTTOM TRACK
Aluminium:
Anodized # 22.26.030
Standard length: 2 metres

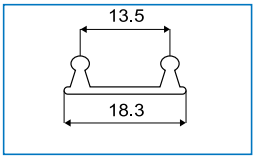

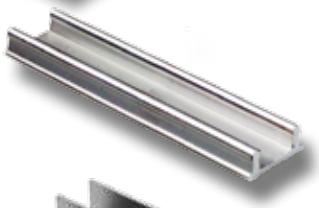

TOP E-TRACK
Aluminium:
Anodized # 22.26.010
Standard length: 2 metres

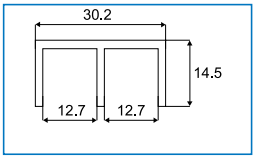

GLASS H-RAIL
Aluminium:
Anodized # 22.26.021
Standard length: 2 metres
For 5 - 6 mm glass thickness

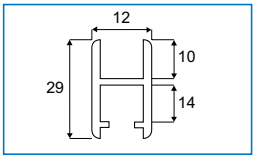

TROLLEY w/Nylon Wheels
Nickel plated # 22.26.041
Load capacity: 3 kg

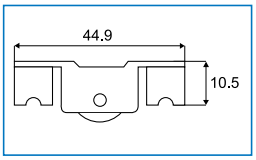

MOUNTING INSTRUCTION
F/LOCK #8600 & #2010

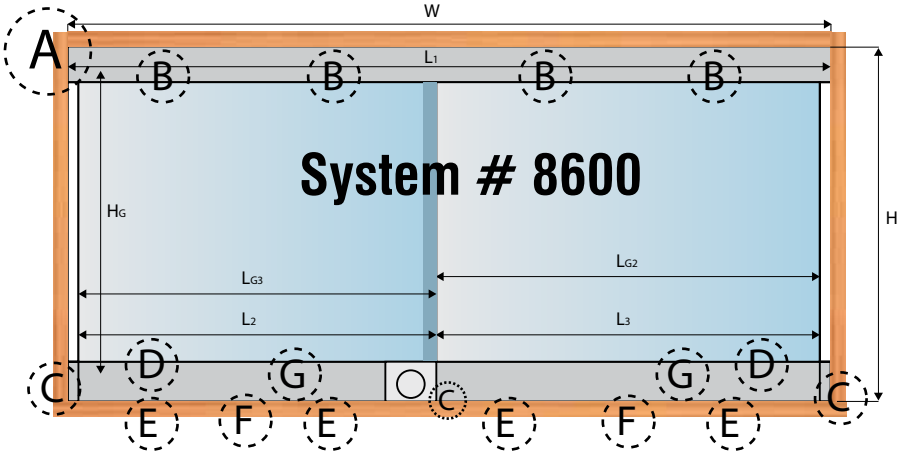

A
TOP E-Track #22.26.010

B
SILENCER #22.26.070
inside TOP E-Track

C
END CAP ZAMAK #22.26.050

D
U-SPLINE PLASTIC #22.26.060

E
TROLLEY #22.26.040

F
BOTTOM TRACK #22.26.030

G
GLASS H-RAIL #22.26.020

How to prepare glass doors size?

$L_1 = W$
$L_2 = \frac{1}{2}L_1 + 30$ mm
$L_3 = \frac{1}{2}L_1$
$H_G = H - 25$ mm
$L_{G2} = L_3 - 2$ mm
$L_{G3} = L_2 - 1$mm

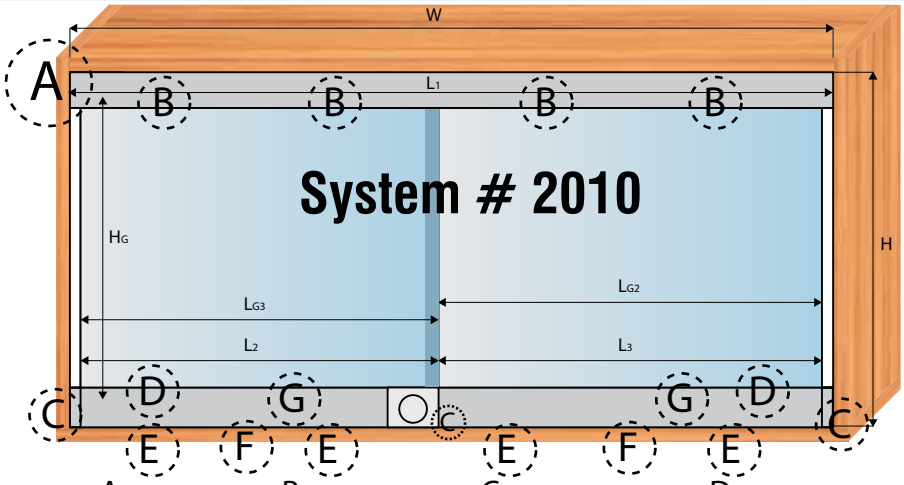

A
TOP E-Track #22.26.010

B
SILENCER #22.26.070
inside TOP E-Track

C
END CAP ZAMAK #22.26.051

D
U-SPLINE PLASTIC #22.26.060

E
TROLLEY #22.26.041

F
BOTTOM TRACK #22.26.030

G
GLASS H-RAIL #22.26.021

How to prepare glass doors size?

$L_1 = W$
$L_2 = \frac{1}{2}L_1$
$L_3 = \frac{1}{2}L_1$
$H_G = H - 30$ mm
$L_{G2} = L_3 - 2$ mm
$L_{G3} = L_2 + 32$ mm

PUSH BUTTON LOCK #2740 „M“ W/STRIKER

- high quality furniture fittings

Application
Double sliding glass doors
Premounted on aluminium frame

Function
Push & turn cylinder with key to lock & turn key to unlock.
Can be installed into H-rail on left or right side

Specification
Zamak with 400 key combinations, key alike or/and master key system

1 set consists of
1 cylinder push lock ø 22 mm with hook pin
1 striker
2 round SISO metal keys, double entry
1 hex key 2 mm
2 grub screws for fastening onto the H-rail

Lock #2740 w/striker

Alu finish - key to differ	# 14.09.440
Alu finish - key alike	# 14.09.441
Alu finish - w/master key	# 14.09.442

Packing
150 pcs per export carton
15 pcs per box

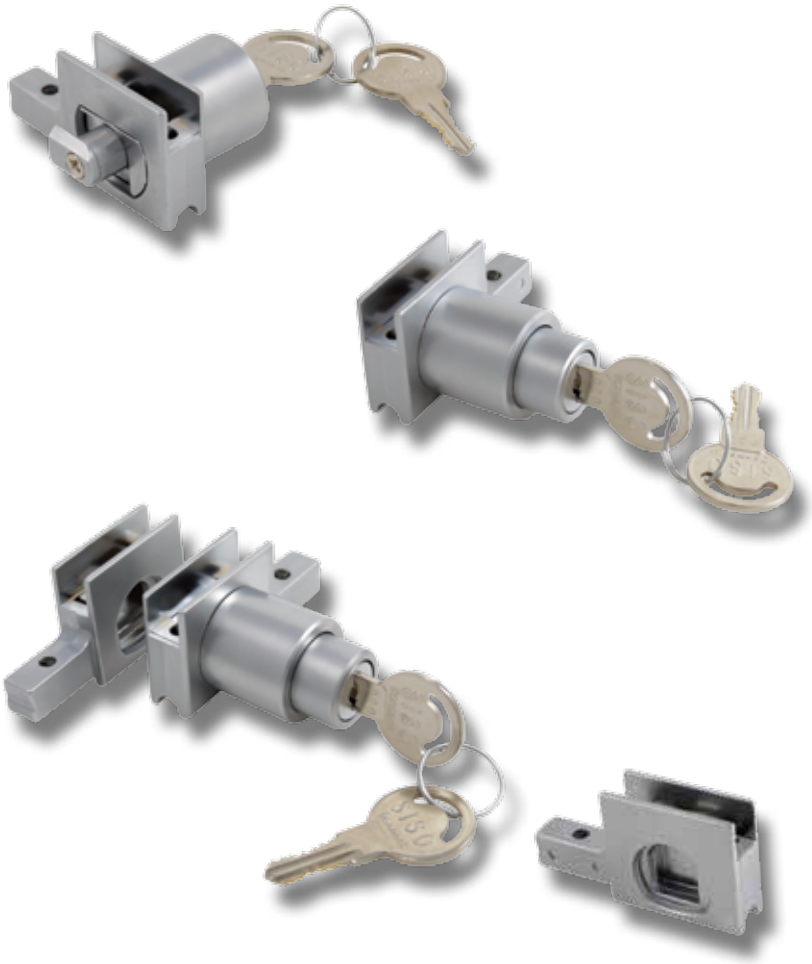

Lock #2740

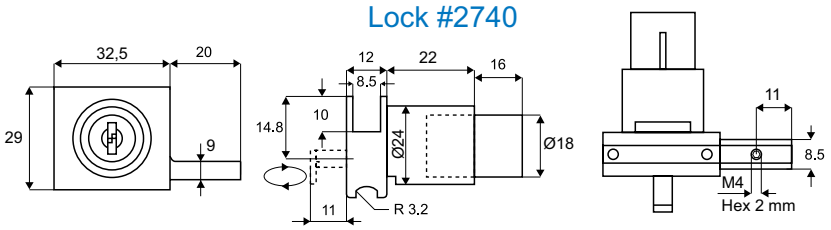

Striker f/lock #2740

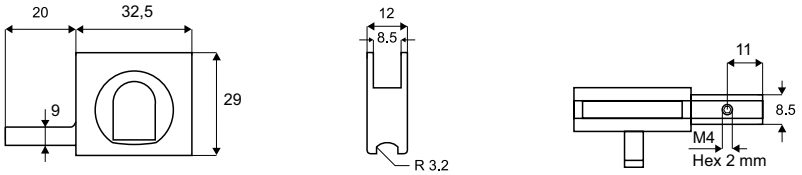

ACCESSORIES F/LOCK #2740 „M“

Glass door handle - Plastic
Alu finish # 14.09.445
F/fixing on H-rail w/grub screw

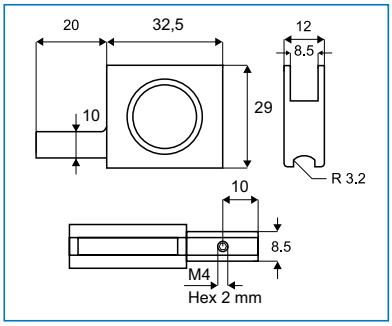

End cap - Plastic
Alu finish # 22.26.053
F/pressing into H-rail

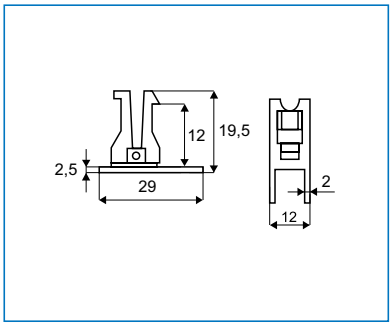

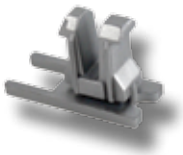

Trolley - w/ball bearing
Zinc plated # 22.26.042
F/fixing on H-rail be use
of tool # 22.26.08
Load capacity: 12 kg pr. trolley

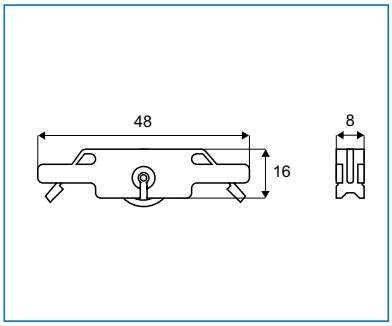

Bottom frame track
Aluminium
Anodized # 22.26.032
2 metres length

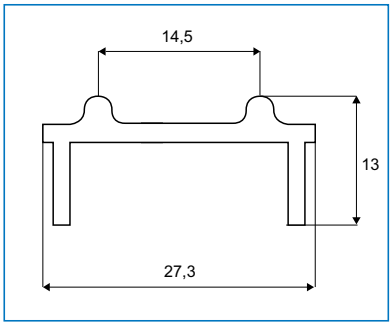

Tool for fixing trolley
Blue # 22.26.080

Anti-lift stopper - Plastic
Transparent # 22.26.075
F/pressing into top E-track to prevent lifting of glass

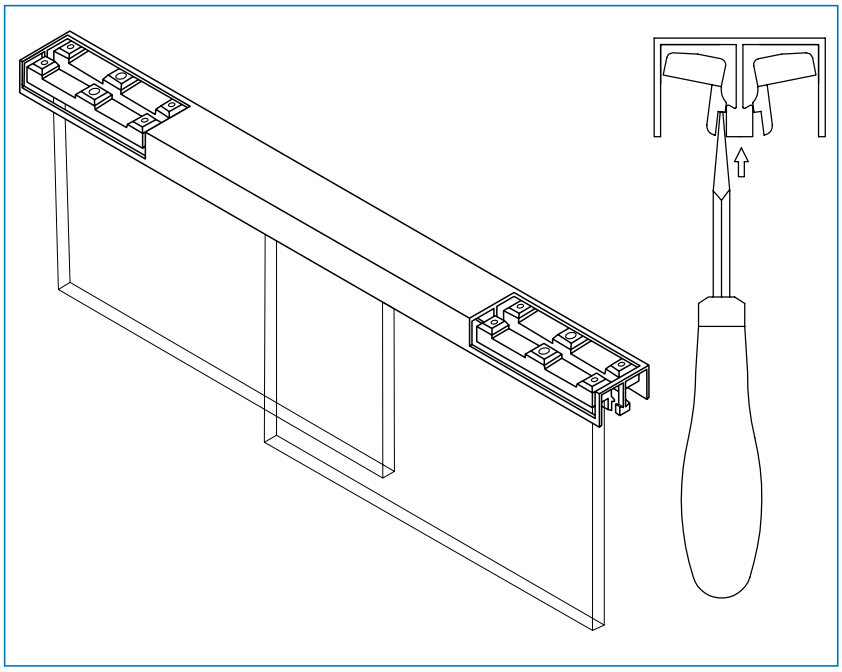

Bottom Track
Aluminium
Anodized # 22.26.031
2 metres length

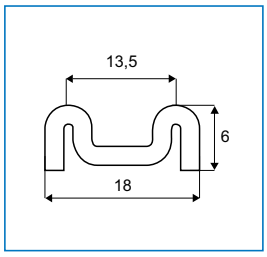

Top E-track with felt
Aluminium
Anodized # 22.26.011
2 metres length

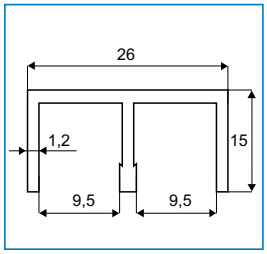

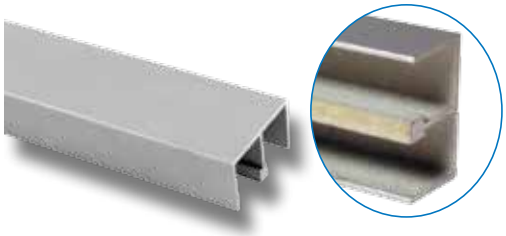

Glass H-rail f/ 5 - 6 mm glass
Aluminium
Anodized # 22.26.023
2 metres length

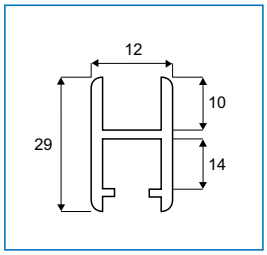

Side & bottom frame track
Aluminium
Anodized # 22.26.025
2 metres length

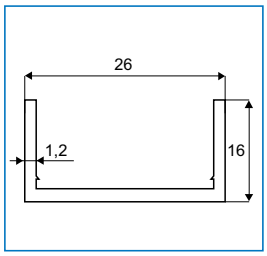

U-SPLINE PLASTIC
Grey color #22.26.060
Rolls of 100 meters

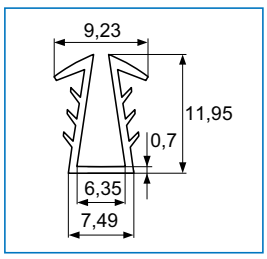

ACCESSORIES F/LOCK #2740 „M“

Bumber frame profile - PVC
Transparent # 22.26.065
2 metres length

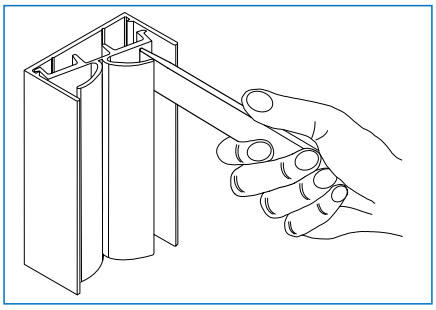

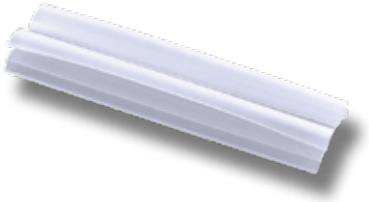

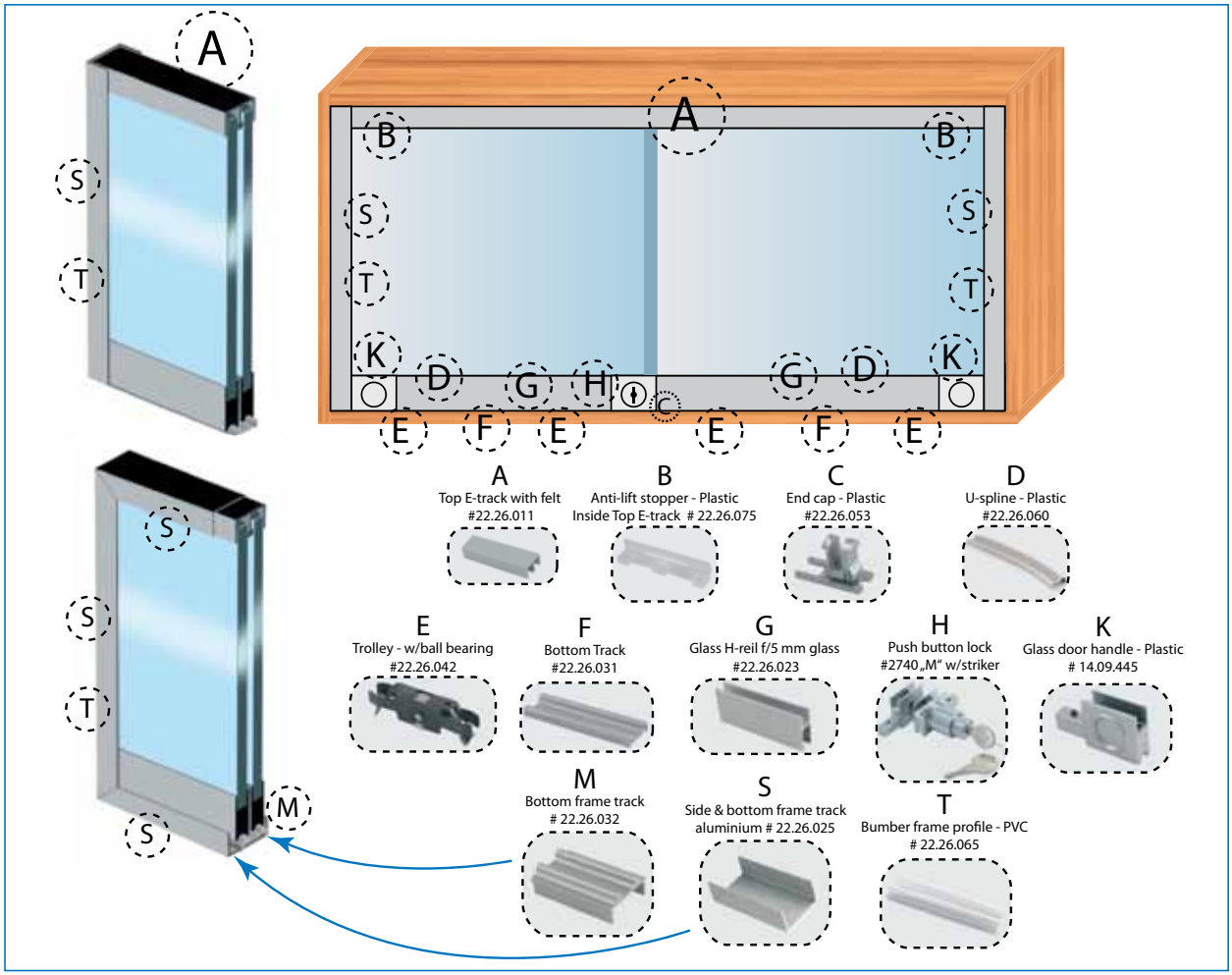

#2740 Model

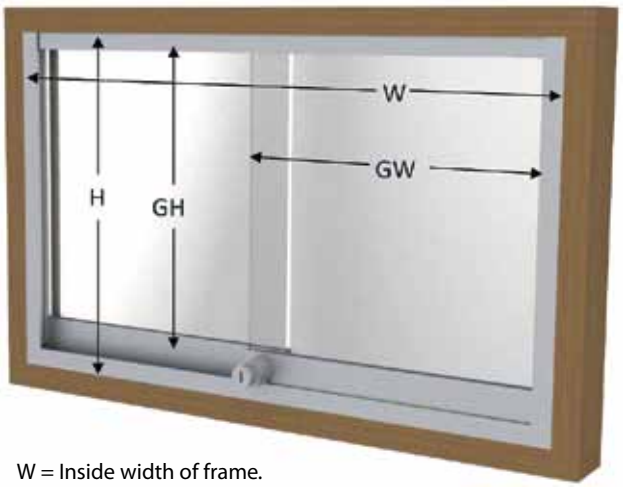

W = Inside width of frame.
GW = Glass width.
H = Inside height of frame.
GH = Glass height.

With frame and high bottom rail (like on picture):

GW = ((W – 2,50 mm) + 30 mm) x 0,5
Frame Overlay

With bumpers at the sides deduct 10 mm from the GW result.

GH = H – 40 mm
Profile+ air.

Without frame and with low bottom rail:

GW = (W + 30 mm) x 0,5
Overlay

With bumpers at the sides deduct 10 mm from the GW result.

GH = H – 25 mm
Profile+ air.

GLASS DOOR LOCK X-907 „M“
SLIDING DOORS

- high quality furniture fittings

MODEL X-907

Finish

Chrome plated	# 14.09.417
Mat nickel plated	# 14.09.416
Gold plated	# 14.09.418
Black anodized	# 14.09.419

Application
Glass sliding doors

Accessories
1 lock
2 car keys, double entry
2 transparent washers

Function
Push and turn key
90º to lock or unlock

Specification
Zamak
400 key combinations or key alike

Options
Master key system

Packing
200 pcs per box

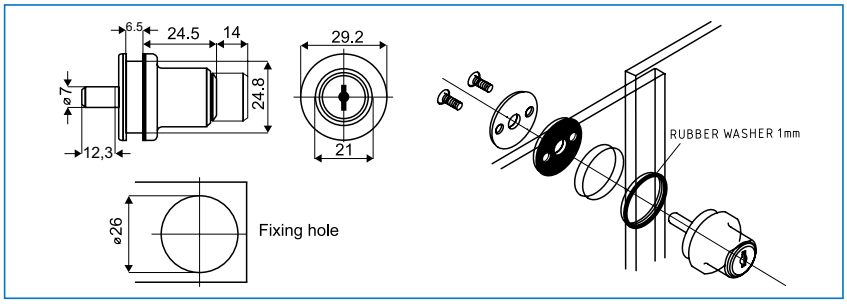

GLASS DOOR LOCK #910 „MIC“
SINGLE DOOR, HINGED

MODEL #910

Finish

Chrome plated	# 14.09.108

Application

Glass hinged doors	4-6 mm
Bore	Ø 25 mm

Accessories for one set
1 cylinder lock
5 washer (plastic & rubber)
2 metal keys, double entry

Function
Turn key 180º to lock or unlock
- w/click sound

Specification
Zamak
400 key combinations or key alike

Options
Master key and
interchangeable system

Packing
240 pcs per export carton

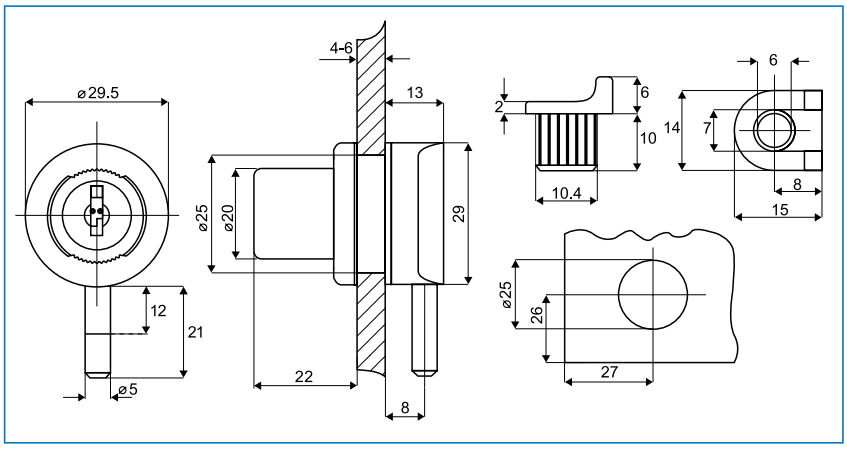

GLASS DOOR LOCK #689 „MIC“
SINGLE DOOR, HINGED

MODEL #689

Finish

Chrome plated	# 14.09.130
Mat nickel plated	# 14.09.131
Gold plated	# 14.09.129
Alu finish	# 14.09.132
Black anodized	# 14.09.136

Application
Glass hinged doors 4-6 mm
Bore: Ø 26 mm

Accessories for one set
1 cylinder lock
5 plastic washer
1 zamak stopper
2 car keys, double entry

Function
Turn key 180º to lock
or unlock - w/click sound

Specification
Zamak
400 key combinations or key alike

Option
Master key
and interchangeable system

Packing
20/200 pcs per box

Option
Lock can be suplied with special designed plate for double hinged door

Chrome plated	# 14.09.170
Mat nickel plated	# 14.09.171
Alu finish	# 14.09.172
Gold plated	# 14.09.173

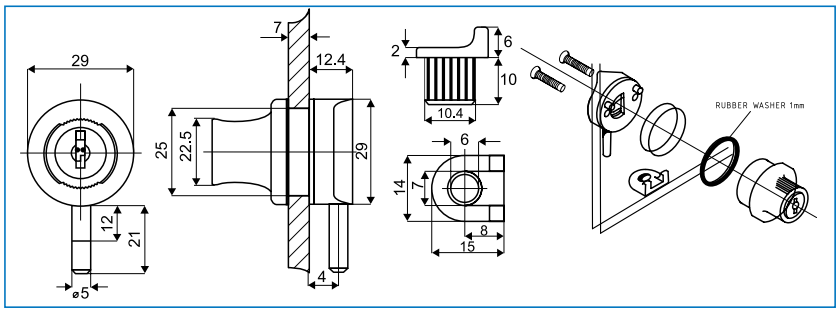

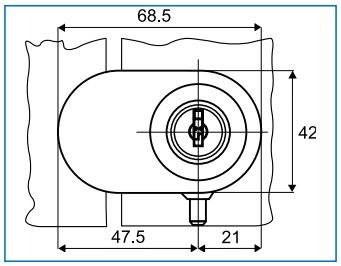

DOOR STOPPER

DOOR STOPPER w/catch

Finish: black plastic # 14.09.119

Application: inset glass door hinged
Can be used as a shelf support
Max glass thickness 6,5mm

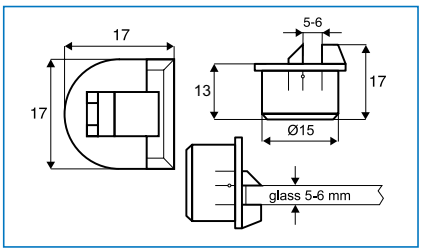

DOOR STOPPER w/hole

Finish: black plastic # 14.09.118

Application: inset glass door hinged
Recommended to use with locks
X-689 and 910 (as a stopper and striking plate)

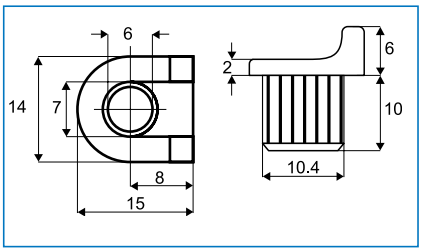

DOOR STOPPER w/bumper

Finish: black plastic # 14.09.105

Application: glass door hinged
Recommended to use with lock 0914

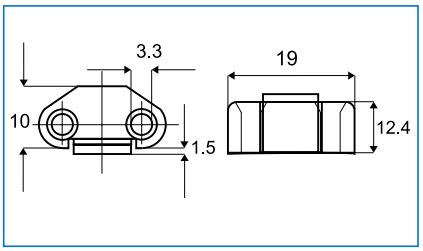

GLASS DOOR LOCK X-916 „M“
DOUBLE OR SINGLE DOORS, HINGED

- high quality furniture fittings

MODEL X-916

Finish
Black anodized # 14.09.047
Chrome plated # 14.09.048
Gold plated # 14.09.049

Application
Hinged glass doors 4-6 mm
Bore Ø 19 mm

Accessories for one set
1 cam lock
1 straight steel cam
1 plastic washer + 1 hex nut
1 flat striking plate:
11 x 57 mm, npl
2 car keys, double entry
1 front plate zamak

Function
Turn key 180º to lock
or unlock - w/click action

Specification
Plate & house: zamak
400 key combinations or key alike

Option
Master key system

Packing
12 pcs per box
240 pcs per export carton

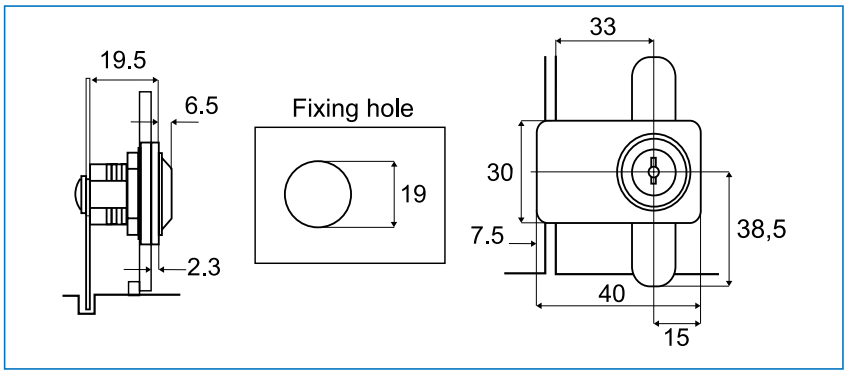

GLASS DOOR LOCK „SAFE“ „M“
SINGLE DOOR, HINGED

MODEL „SAFE“

Finish
Chrome plated # 14.09.320

Application
Single glass door, hinged
Bore Ø 19 mm

Accessories for one set
1 cam lock
1 hexagonal nut
1 plastic washer
1 straight cam
1 front plate
1 flat striking plate
2 car keys, double entry

Function
Turn key 90º
to lock or unlock - w/click sound

Specification
Zamak
400 key combinations or key alike

Option
Master key system

Packing
12 pcs per box
240 pcs per export

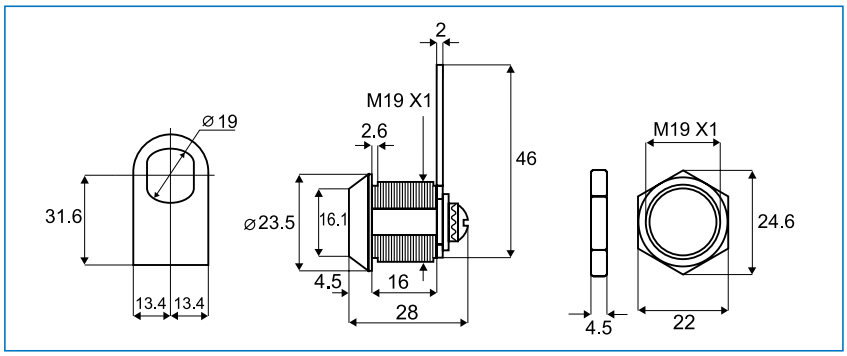

GLASS DOOR LOCK „VETRO“ „MIC“
SINGLE DOOR, HINGED

MODEL „VETRO“

Finish

Chrome plated	# 14.09.261
Gold plated	# 14.09.260
Black anodized	# 14.09.262

Application
Single glass door, hinged
No boring required
Max 8 mm glass thickness

Accessories for one set
1 lock w/front plate:
2 fastening screws
1 flat striking plate
2 car keys double entry
1 plastic distance plate

Function
Turn key 180º to lock
and reverse to unlock

Specification
Zamak
400 key combinations
or key alike

Option
Master key
and interchangeable system

Packing
24 pcs per box
240 pcs per export carton

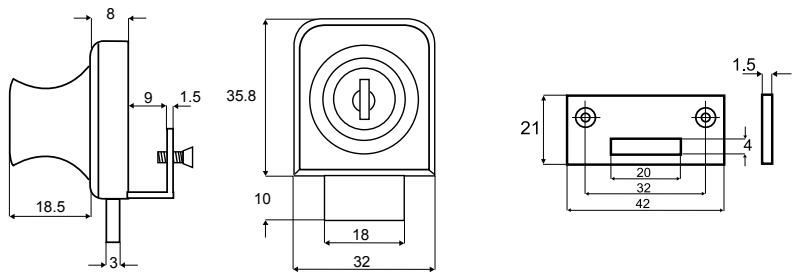

GLASS DOOR LOCK „VETRO-DOUBLE“ „MIC“
DOUBLE DOORS, HINGED

MODEL „VETRO-DOUBLE“

Finish

Chrome plated	# 14.09.270
Gold plated	# 14.09.271
Black anodized	# 14.09.272

Application
Double glass doors, hinged
No boring required
Max 8 mm glass thickness

Accessories for one set
1 lock w/front plate
2 fastening screws
1 flat striking plate
2 car keys double entry
1 plastic distance plate

Optionals

Door stopper	# 14.09.118
Spring stopper	# 14.09.119

Function
Turn key 180º
to lock and reverse to unlock

Specification
Zamak, 400 key combinations
or key alike

Option
Master key
and interchangeable system

Packing
24 pcs per box
240 pcs per export carton

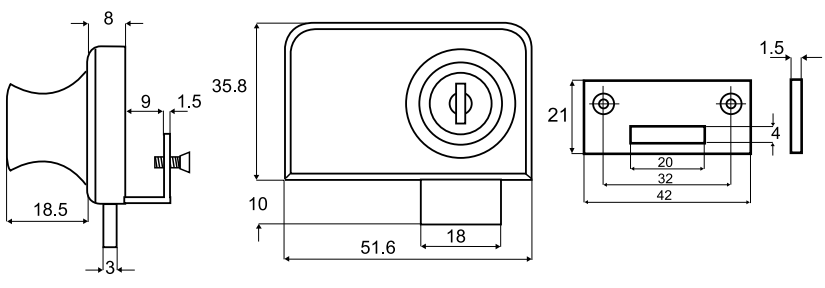

GLASS DOOR LOCK #64081 „MIC“
SINGLE DOOR, HINGED

- high quality furniture fittings

MODEL #64081

Finish

Chrome plated	# 14.09.210
Gold plated	# 14.09.211
Black anodized	# 14.09.212

Application
Single glass door, hinged
No boring required

Accessories for one set
1 lock w/front plate
2 fastening screws
1 flat striking plate
2 car keys double entry
1 plastic distance plate

Function
Turn key 180º to lock
and reverse to unlock

Specification
Zamak
400 key combinations
or key alike

Option
Master key
and interchangeable system

Packing
20 pcs per box
200 pcs per export carton

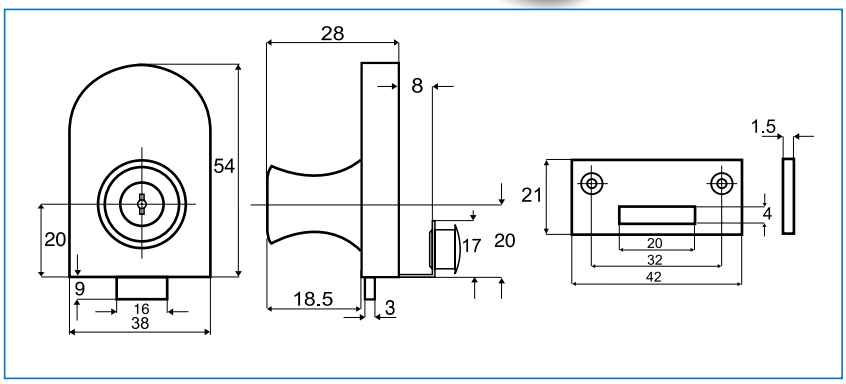

GLASS DOOR LOCK #917 „MIC“
NO BORE - DOUBLE DOORS, HINGED

MODEL #917

Finish

Chrome plated	# 14.09.220
Gold plated	# 14.09.226
Alu finish	# 14.09.223

Application
Double glass doors, hinged
No boring required

Accessories for one set
1 lock w/large front plate
2 fastening screws
1 flat striking plate
2 car keys double entry
1 plastic distance plate

Optionals

Door stopper	# 14.09.118
Spring stopper	# 14.09.119

Function
Turn key 180º to lock
and reverse to unlock

Specification
Zamak
400 key combinations or key alike

Option
Master key
and interchangeable system

Packing
12 pcs per box
240 pcs per export box carton

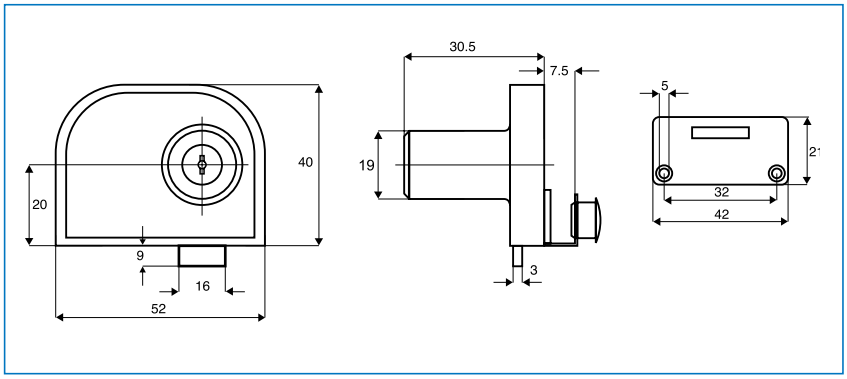

GLASS DOOR LOCK #918 „MIC“
NO BORE - SINGLE DOOR, HINGED

MODEL No. 918

FINISH

Chrome plated	# 14.09.217
Gold plated	# 14.09.218
Alu finish	# 14.09.217-1

Application
Single glass doors, hinged
No boring required

Accessories for one set
1 lock w/front plate
2 fastening screws
1 flat striking plate
2 car keys double entry
1 plastic distance plate

Optionals

Door stopper	# 14.09.118
Spring stopper	# 14.09.119

Function
Turn key 180º
to lock and reverse to unlock

Specification
Zamak
400 key combinations or key alike

Option
Master key
and interchangeable system

Packing
12 pcs per box
240 pcs per export carton

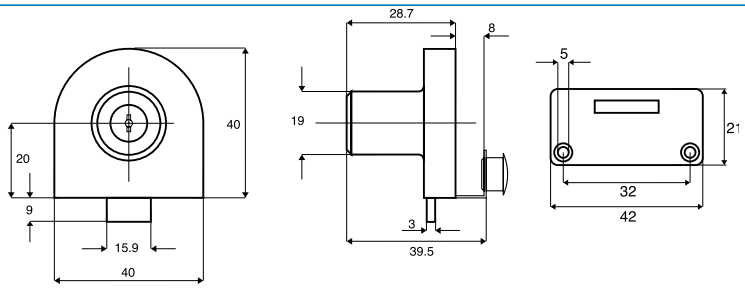

STRIKER (FOR LOCK X-918)
FOR DOUBLE HINGED DOORS

MODEL „STRIKER“

Finish

Chrome plated	# 14.09.246
Alu finish	# 14.09.247
Gold plated	# 14.09.248

Application
Single glass door, hinged
No boring required

Accessories for one set
1 lock w/front plate
2 fastening screws
1 flat striking plate
1 plastic distance plate

Packing
24 pcs per box
240 pcs per export carton

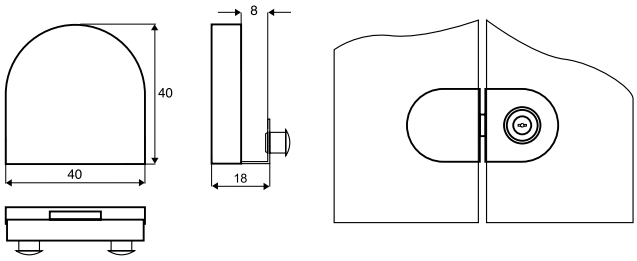

GLASS SHELF SUPPORT
- with retainer
Material: Steel pin Ø 5 mm, bright zinc plated and transparent plastic support
with retainer
Suitable for GLASS THICKNESS
B = 4,5 +5,5 + 6,0 + 8,0 mm

5,5 mm # 22.02.080

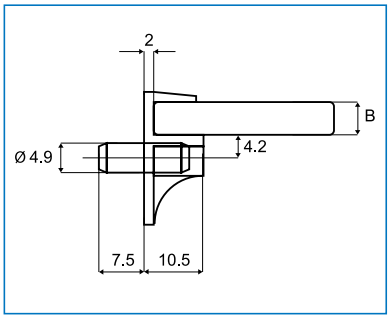

GLASS SHELF SUPPORT „CRISTAL“
Material: Steel pin Ø 5 mm,
mantled with transparent plastic
to 7 mm diam.
Bright zinc plated # 22.02.037
Brass plated # 22.02.038

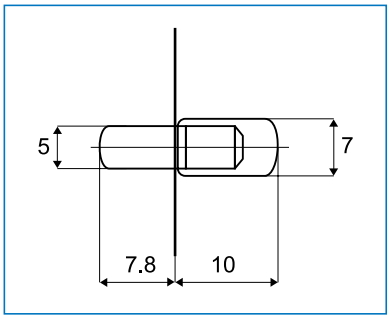

GLASS SHELF SUPPORT
with slide lock No. 1630
- moulded in sets (left + right)
Material: transparent plastic # 22.02.082
Pin: Ø 5 mm
Bore hole: 9,5 mm from edge
Glass: 5 mm
Packing: 3500 pcs

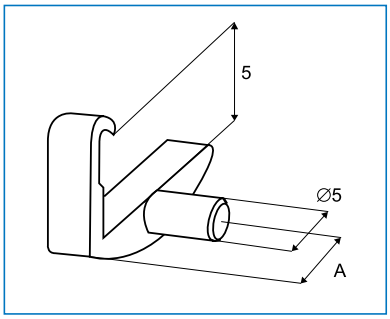

GLASS SHELF SUPPORT „PARROT“
w/clip fixing to secure the glass

Material: Zamak, Nickel plated
Pin: Ø 5 mm
Glass thickness: 4 - 8 mm
Item No. # 22.02.456

Packing: 1000 pcs per export carton

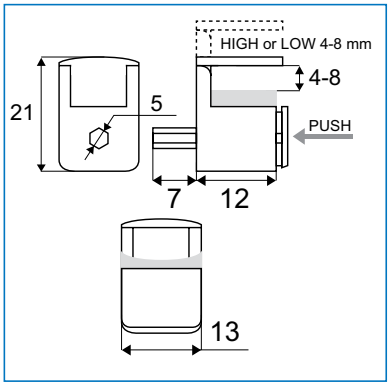

SHELF SUPPORT - w/ flexible Retainer
for GLASS SHELVES (min. 5mm)
Material: Plastic
PIN: 5 mm
Colours
White # 22.02.066
Black # 22.02.067
Brown
Transparent
For glass minimum 5mm

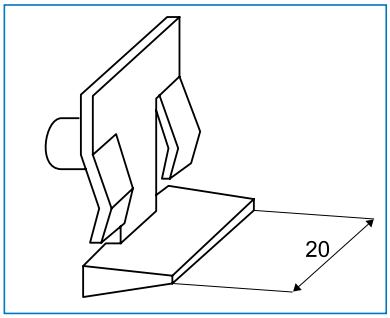

SHELF SUPPORTS FOR GLASS

SHELF SUPPORT „ALFA“ - w/ catch for glass 4-8 mm
with eccentric Pin Ø 5 mm
Zamak
Nickel plated # 22.02.245

Options
Without pin but with hole Ø 5 mm for screw

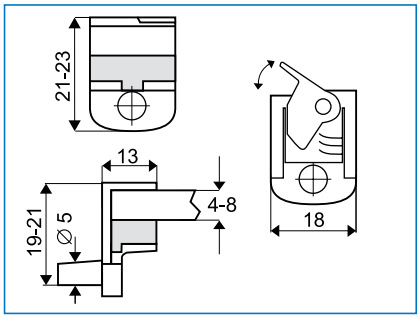

SHELF SUPPORT w/2 rubber O-rings

Material
Steel, NPL # 22.02.200

Packing
5000 pcs

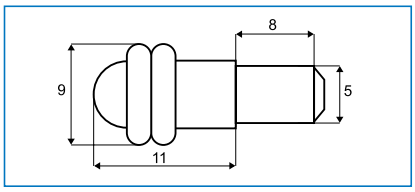

SHELF SUPPORT w/soft plastic screw

Material
Zamak, nickel plated

Sizes: D Ø L
8 mm 5 mm 8 mm # 22.02.231
5 mm 5 mm 8 mm # 22.02.230

Packing
1000 pcs

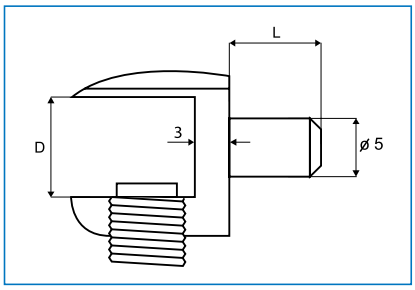

SHELF SUPPORT W/SUCTION PAD

Material
Zamak, nickel plated
NO.213 # 22.02.240
NO.215 # 22.02.241

Packing: 2500 pcs

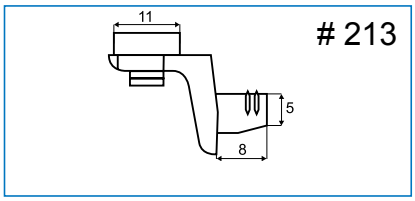

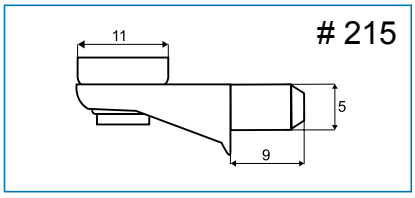

SHELF SUPPORT - Double

M6 mounting screw for 6-8 mm glass thickness
Material: Brass, NPL # 22.02.116

Size: 2 pcs each Ø 12 x 18 mm
Packing: 100 pcs per box
700 pcs per export carton

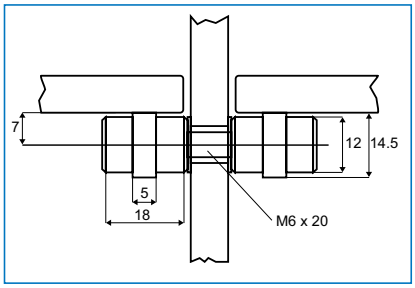

RUBBER WASHER for shelf support # 22.02.115 & # 22.02.116
Transparent # 22.02.114

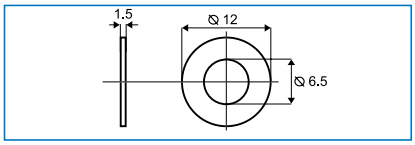

SHELF SUPPORT - Single

M6 mounting screw for 6-8 mm glass thickness

Material
Brass, NPL # 22.02.115

Size
Ø 12 x 18 mm
Packing: 150 pcs per box
1200 pcs per export carton

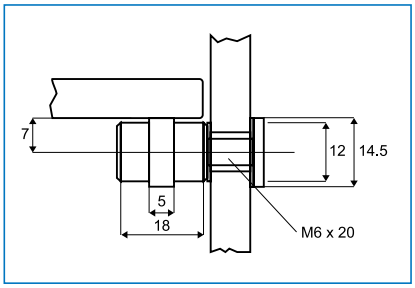

SHELF SUPPORT - Cylindrical
Mounting with wood screw ø 4,5 mm
Material: Zamak
Sizes

	Ø	S	
CPL	ø17 mm	4 - 6 mm	# 22.02.220
ALU	ø17 mm	4 - 6 mm	# 22.02.221
CPL	ø20 mm	8 -10 mm	# 22.02.210
ALU	ø20 mm	8 -10 mm	# 22.02.213

Packing
100 pcs

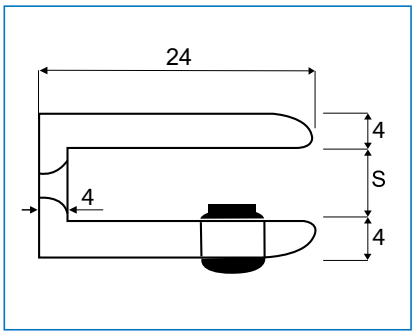

GLASS SHELF SUPPORT „SQUARE“
w/ø4 mm screw hole, CSK

Material:	Zamak
Size: (W/H/D)	30 x 27 x 16 mm
Glass thickness:	4 - 8 mm
Chrome plated	# 22.02.560
Alu finish	# 22.02.561
SS-look	# 22.02.563

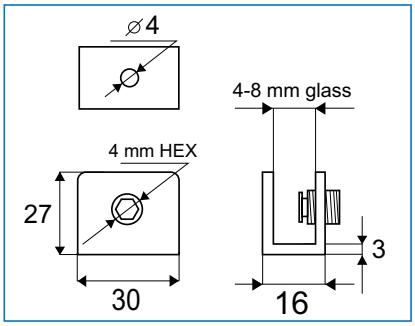

GLASS SHELF SUPPORT „SQUARE“
"X-STRONG"

Material:	Zamak
Size: (W/H/D)	30 x 30 x 27 mm
Glass thickness:	4 - 8 mm
Mounting:	Ø 4 mm CSK hole
Chrome plated	# 22.02.610
Alu finish	# 22.02.611

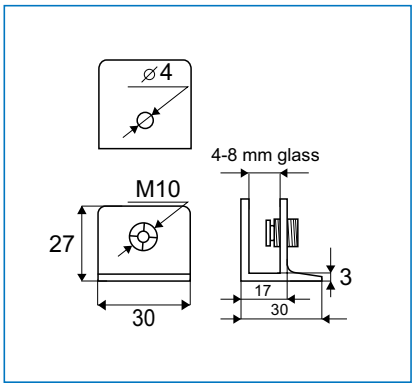

GLASS SHELF SUPPORT „SQUARE XL“

Material:	**Zamak**
Size: (W/H/D)	100 x 16 x 27 mm
Glass thickness:	4 - 8 mm
Mounting:	Ø 4 mm CSK hole
Chrome plated	# 22.02.565
Alu finish	# 22.02.566

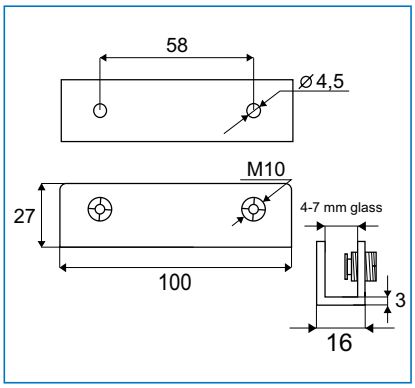

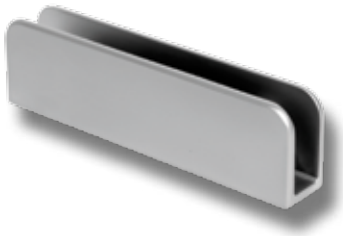

SHELF SUPPORTS FOR GLASS

GLASS SHELF SUPPORT „HALF MOON“ w/ø4 mm screw hole, CSK

Material:	Zamak
Size: (W/H/D)	50 x 16 x 27 mm
Glass thickness:	4 - 8 mm
Chrome plated	# 22.02.570
Alu finish	# 22.02.571
SS-look	# 22.02.573

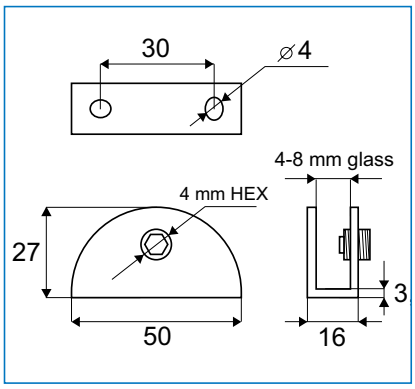

GLASS SHELF SUPPORT „HALF-MOON“ "X-STRONG"

Material:	Zamak
Size: (W/H/D)	50 x 30 x 27 mm
Glass thickness:	4 - 8 mm
Mounting:	Ø 4 mm CSK hole
Chrome plated	# 22.02.620
Alu finish	# 22.02.621

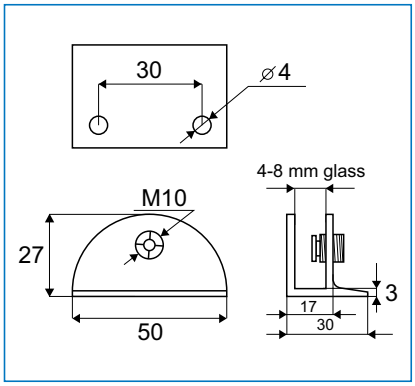

GLASS SHELF SUPPORT „MUS“ w/ø4 mm screw hole, CSK

Material:	Zamak
Size: (W/H/D)	15 x 16 x 27 mm
Glass thickness:	6 - 10 mm
Chrome plated	# 22.02.600
Alu finish	# 22.02.601
SS-look	# 22.02.603

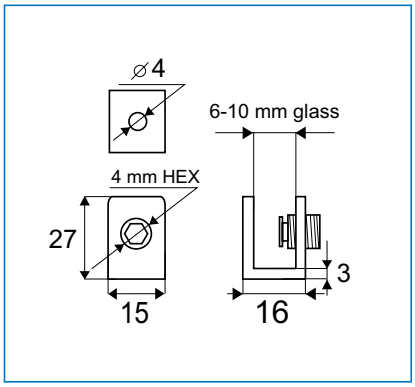

GLASS SHELF SUPPORT „CYLINDRICAL“ F/GLASS WALL FIXING

Material:	Brass
Size:	Ø 20 x 26 mm
Glass thickness:	6 - 10 mm
Chrome plated	# 22.02.235

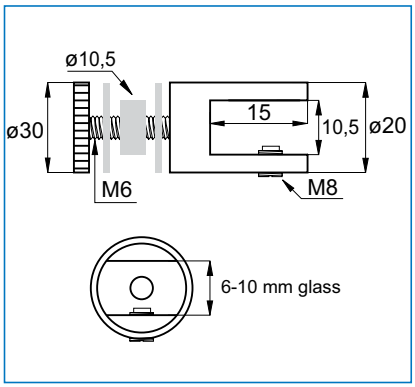

GLASS SHELF SUPPORT „CYLINDRICAL“ w/M6 mm screw hole

Material:	Zamak
Size:	Ø 20 x 26 mm
Glass thickness:	6 - 10 mm
Chrome plated	# 22.02.226
Alu finish	# 22.02.227
SS-look	# 22.02.228

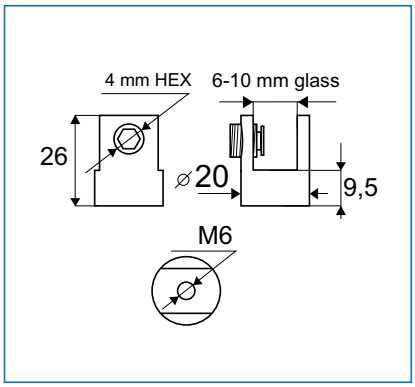

GLASS SHELF SUPPORT „DOME“
SMALL w/ø4 mm screw hole, CSK

Material: Zamak, Chrome plated
Size: (W/H/D) 37 x 19 x 18 mm
Glass thickness: 4 - 7 mm
Item No. # 22.02.575

Inclusive screws and wall plugs

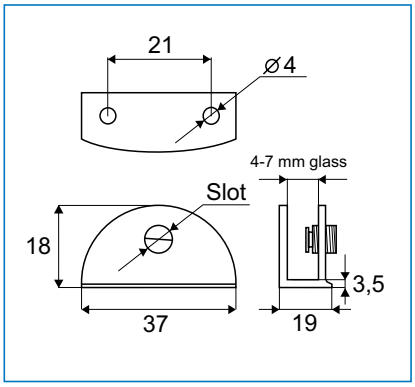

GLASS SHELF SUPPORT „DOME“
LARGE w/ø5 mm screw holes, CSK

Material: Zamak
Size: (W/H/D) 49 x 24 x 23 mm
Glass thickness: 7 - 10 mm
Chrome plated # 22.02.580
Alu finish # 22.02.581

Inclusive screws and wall plugs

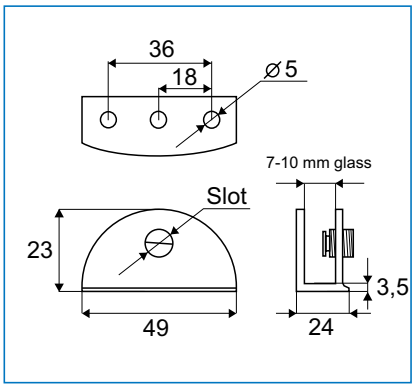

GLASS SHELF SUPPORT „RECTA“
SMALL w/ø4 mm screw holes, CSK

Material: Zamak, Chrome plated
Size: (W/H/D) 39 x 23 x 18 mm
Glass thickness: 4 - 7 mm
Item No. # 22.02.590

Inclusive screws and wall plugs

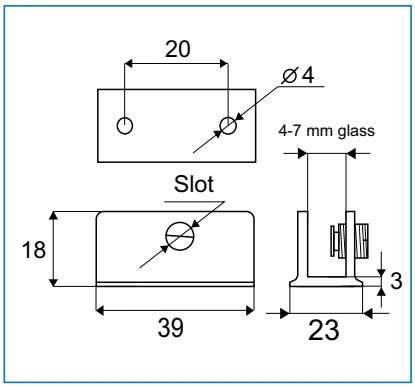

GLASS SHELF SUPPORT „RECTA“
LARGE w/ø5 mm screw holes, CSK

Material: Zamak, Chrome plated
Size: (W/H/D) 50 x 26 x 25 mm
Glass thickness: 4 - 10 mm
Item No. # 22.02.595

Inclusive screws and wall plugs

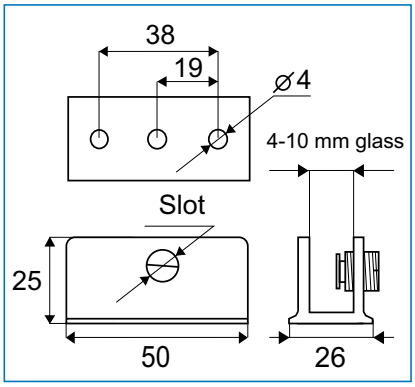

CABLE SIGN SYSTEM F/WALL MOUNTING ALUMINIUM ANODIZED

1 SET CONSISTS OF:
2 x 2 meters ø 1,5 mm SS 304 wire
2 x top fixings & 2 bottom fixings with spring tension
Suitable for A1, A2, A3 & A4 signs
(Sign holders to be bought separately)

Item No. # 22.12.050

Top fixing

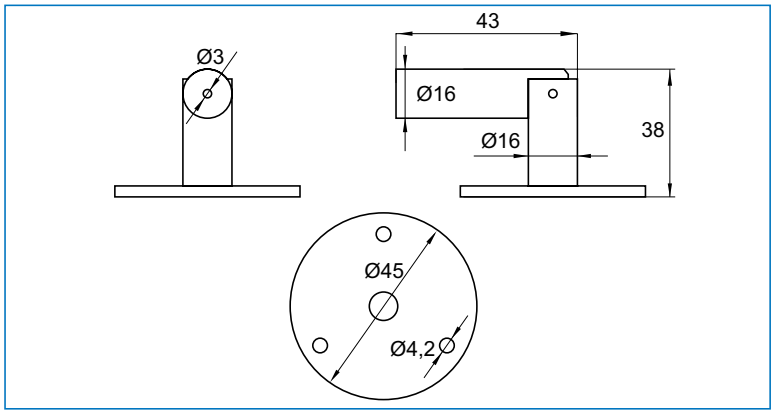

Bottom fixing

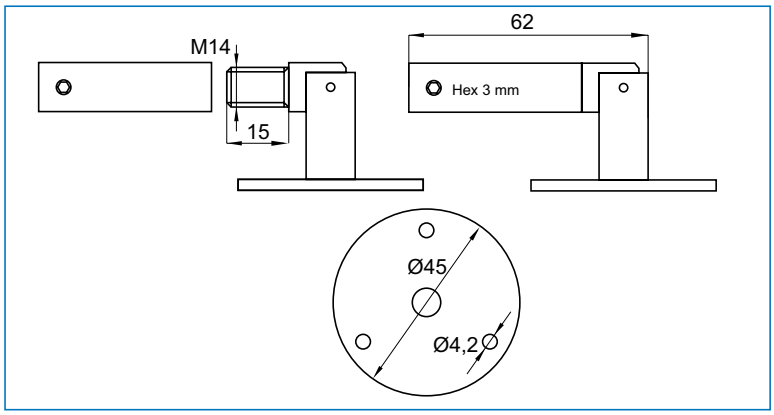

CABLE SIGN HOLDERS IN ALUMINIUM

Size: ø 16 x 27 mm
Display thickness from 6 - 8 mm
4 pcs per sign is needed

Item No. # 22.12.060

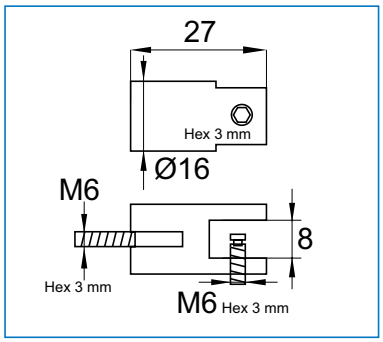

CABLE SHELF SYSTEM F/WALL MOUNTING ALUMINIUM ANODIZED

- high quality furniture fittings

1 SET CONSISTS OF:
2 x 4 meters ø 3 mm SS 304 wire
2 x top fixings & 2 bottom fixings with spring tension
4 x shelf sticks
Max 20 kg per shelf
(Shelf holders to be bought separately)

Item No. # 22.12.000

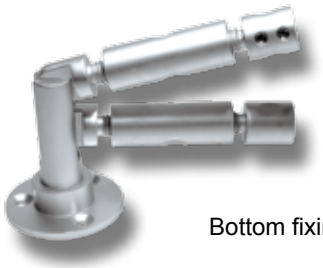

Bottom fixing

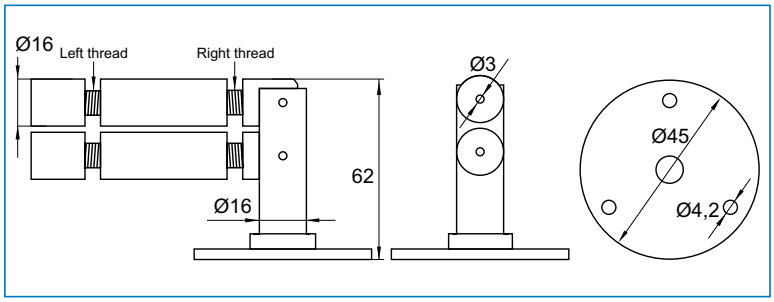

Top fixing

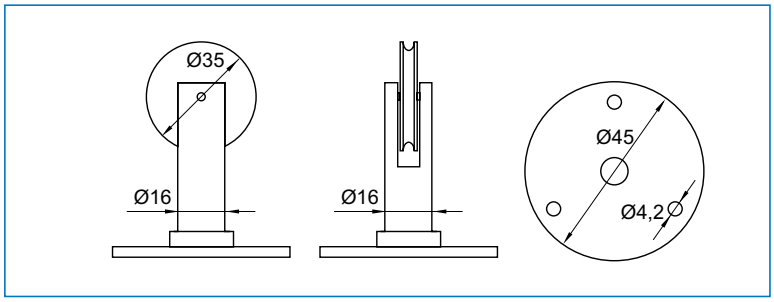

Shelf stick

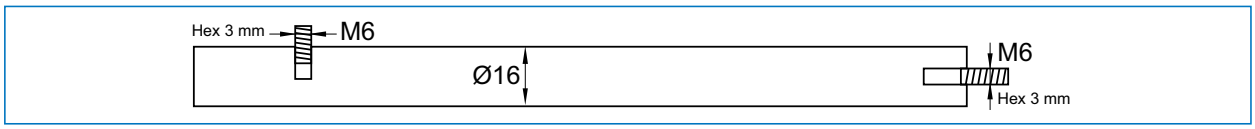

CABLE SHELF HOLDERS IN ALUMINIUM

Size: ø 16 x 27 mm
Display thickness from 6 - 8 mm
4 pcs per shelf is needed

Item No. # 22.12.010

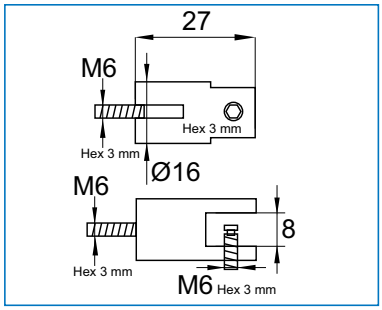

ADJUSTABLE SHELF SUPPORT „PELICANS“

MODEL NO. 53
For glass & wood shelves

Material: Zamak
Shelf thickness: 4-40 mm
Max load: 40 kg

Finish:

Alu finish	# 22.02.550
Mat nickel	# 22.02.551
Polished chrome	# 22.02.552

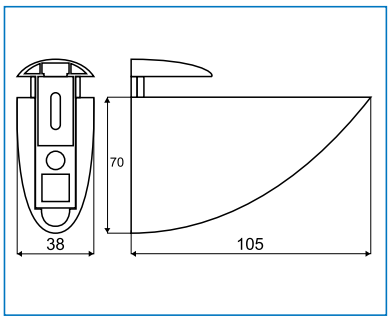

MODEL NO. 52
For glass & wood shelves

Material: Zamak
Shelf thickness: 4-26 mm
Max load: 30 kg

Finish:

Alu finish	# 22.02.545
Mat nickel	# 22.02.546
Polished chrome	# 22.02.547
SS-look	# 22.02.548

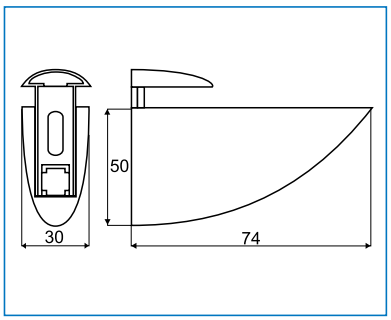

MODEL NO. 45
For glass & wood shelves

Material: Zamak
Shelf thickness: 4-10 mm
Max load: 20 kg

Finish:

Polished chrome	# 22.02.495
SS-look	# 22.02.496

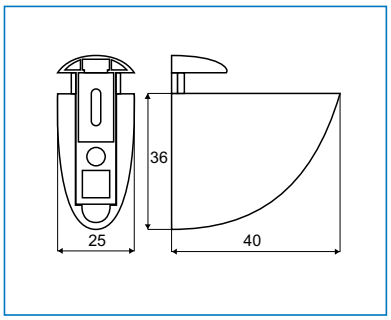

MODEL NO. 51
For glass & wood shelves

Material: Zamak
Shelf thickness: 4-26 mm
Max load: 30 kg
Finish:

Mat chrome coated	# 22.02.540
Mat nickel coated	# 22.02.541
Polished chrome	# 22.02.542
SS-look	# 22.02.543

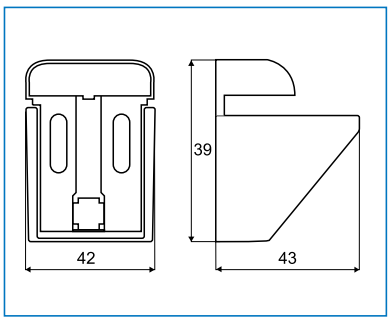

MODEL NO. 48
For glass & wood shelves

Material: Zamak
Shelf thickness: 4-24 mm
Max load: 20 kg

Finish:

Mat chrome coated	# 22.02.520
Mat nickel coated	# 22.02.521
Polished chrome	# 22.02.522
SS-look	# 22.02.523

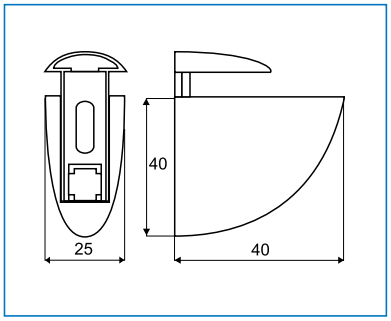

MODEL NO. 49
For glass & wood shelves

Material: Zamak
Shelf thickness: 4-22 mm
Max load: 20 kg

Finish:

Chrome plated	# 22.02.525
Alu finish	# 22.02.526
SS-look	# 22.02.527

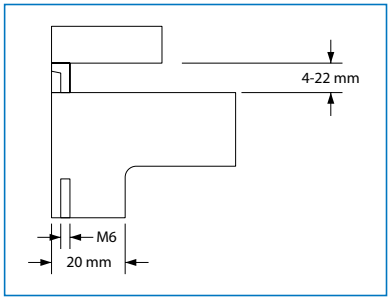

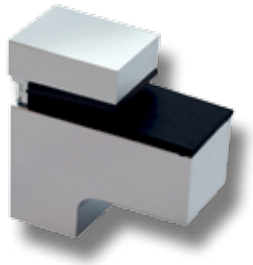

MODEL NO. 54
For glass & wood shelves

Material: Zamak
Shelf thickness: 4-44 mm
Max load: 20 kg

Finish:

Chrome plated	# 22.02.555
Alu finish	# 22.02.556
SS-look	# 22.02.557

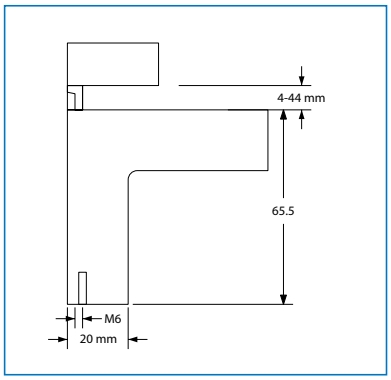

MODEL NO. 43
For glass & wood shelves

Material: Zamak
Shelf thickness: 4-24 mm
Max load: 20 kg

Finish:

Black coated	# 22.02.470
Alu finish	# 22.02.471
Polished chrome	# 22.02.472
SS-look	# 22.02.473
Matt nickel	# 22.02.474

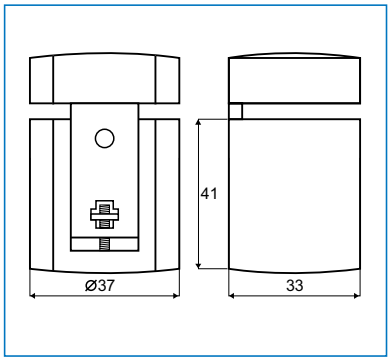

MODEL NO. 44
For glass & wood shelves

Material: Zamak
Shelf thickness: 4-24 mm
Max load: 20 kg

Finish:

Black coated	# 22.02.475
Alu finish	# 22.02.476
Polished chrome	# 22.02.477
SS-look	# 22.02.478
Matt nickel	# 22.02.479

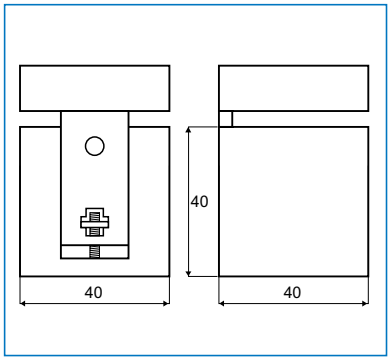

MODEL NO. 47
For glass & wood shelves

Material: Zamak
Shelf thickness: 4-26 mm
Max load: 20 kg

Finish:

Mat chrome coated	# 22.02.510
Mat nickel coated	# 22.02.511
Polished chrome	# 22.02.512
SS-look	# 22.02.513

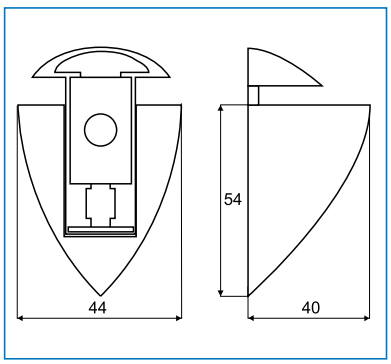

ZAMAK GLASS CLAMP N0. 31
F/WALL MOUNTING

Application
Balconies, balustrade, shelfs etc.

Material
Zamak

Model „Large“ w/round rubber rings f/glass thickness 4-10 mm

Chrome plated	# 22.10.150
Gold plated	# 22.10.151
Matt nickel plated	# 22.10.152

Packing
100 pcs per carton

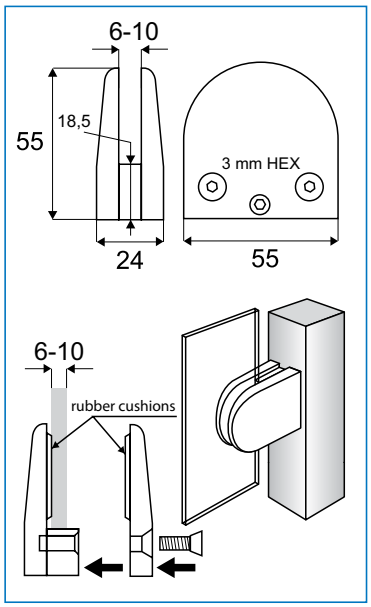

Application
Balconies, balustrade, shelfs etc.

Material
Zamak

Model „Medium“ w/flat rubber cushions f/glass thickness 4-10 mm

Chrome plated	# 22.10.160
Gold plated	# 22.10.1XX
Matt nickel plated	# 22.10.161

Packing
100 pcs per carton

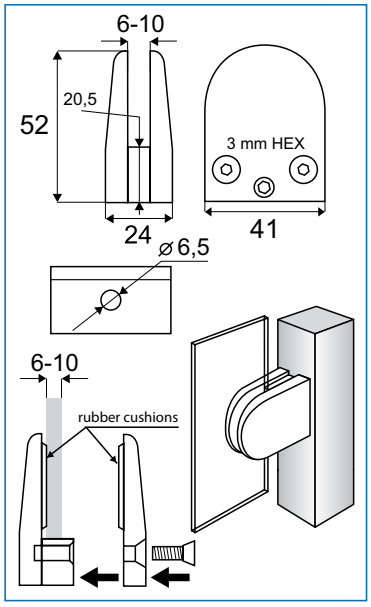

Application
Balconies, balustrade, shelfs etc.

Material
Zamak

Model „Small“ w/flat rubber cushions f/glass thickness 4-5 mm

Chrome plated	# 22.10.165
Gold plated	# 22.10.1XX
Matt nickel plated	# 22.10.166

Packing
500 pcs per carton

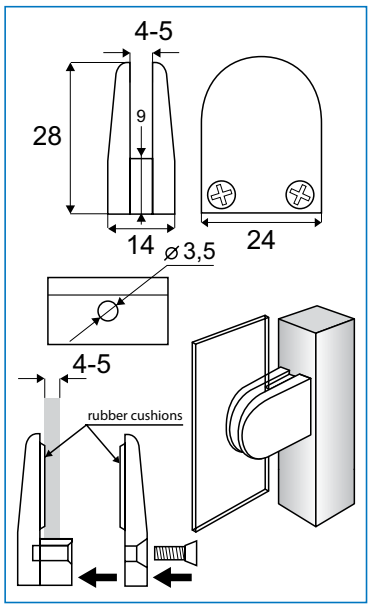

ZAMAK GLASS CLAMP N0. 31
F/TUBE MOUNTING

- high quality furniture fittings

Application
Balconies, balustrade, staircases etc.

Material
Zamak

ø45 mm tube „L“ w/round rubber rings f/glass thickness 4-10 mm

Chrome plated	# 22.10.170
Matt nickel plated	# 22.10.171
Gold plated	# 22.10.XXX

Packing
100 pcs per carton

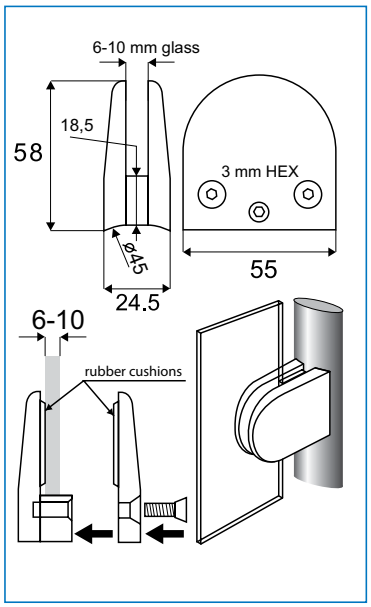

Application
Balconies, balustrade, staircases etc.

Material
Zamak

ø38 mm tube „M“ w/flat rubber cushions f/glass thickness 4-10 mm

Chrome plated	# 22.10.175
Matt nickel plated	# 22.10.176
Gold plated	# 22.10.XXX

Packing
100 pcs per carton

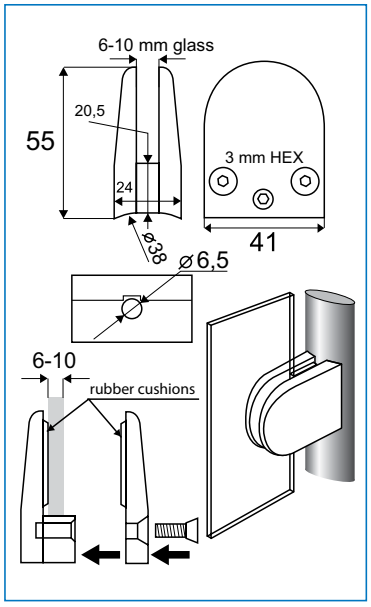

Application
Balconies, balustrade, staircases etc.

Material
Zamak

ø31 mm tube „S“ w/flat rubber cushions f/glass thickness 4-5 mm

Chrome plated	# 22.10.180
Matt nickel plated	# 22.10.181
Gold plated	# 22.10.XXX

Packing
500 pcs per carton

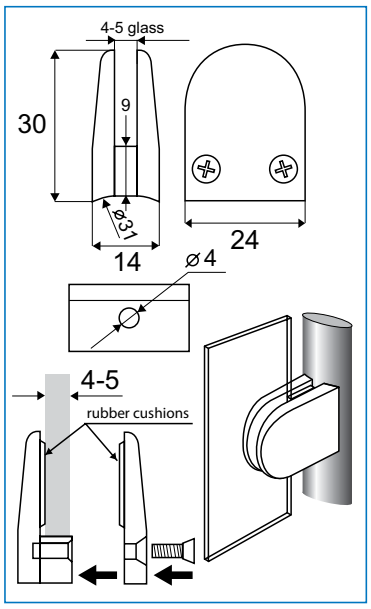

STAINLESS STEEL & ZAMAK GLASS CLAMPS APPROVED BY TÜV – GERMANY ACCORDING TO EN-12600

ON THE BASIS OF THE EN-12600 STANDARD, SISO´S GLASS CLAMPS MODEL SQUARE, OVAL-S & OVAL-L IN STAINLESS STEEL 304, 316 & ZAMAK HAVE BEEN APPROVED BY TÜV – GERMANY.

DROP IMPACT TEST

DROP IMPACT TEST

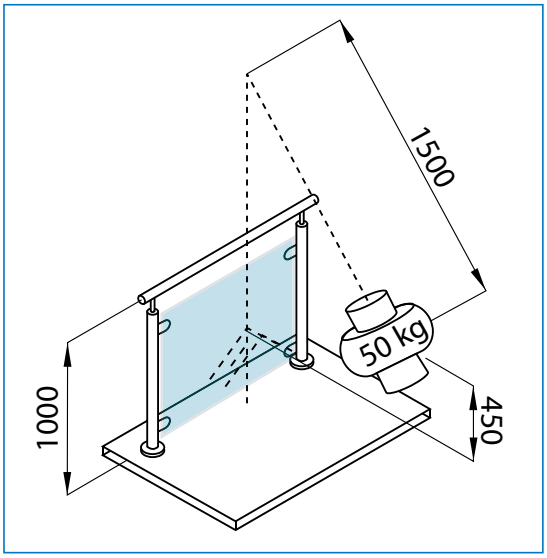

STATIC TEST

STAINLESS STEEL & ZAMAK GLASS CLAMPS „SQUARE“

- high quality furniture fittings

Material: Brushed stainless steel 304 & 316 or zamak, raw

Glass thickness: 6 - 10,76 mm
Size: 45 x 47 x 27 mm

Model „Flat“ without cushions

SS-316 Brushed	# 22.10.200-0
SS-304 Brushed	# 22.10.200-9
Zamak Raw	# 22.10.200-8

Model „Tube ø33,7 mm“ without cushions

SS-316 Brushed	# 22.10.201-0
SS-304 Brushed	# 22.10.201-9
Zamak Raw	# 22.10.201-8

Model „Tube ø42,4 mm“ without cushions

SS-316 Brushed	# 22.10.202-0
SS-304 Brushed	# 22.10.202-9
Zamak Raw	# 22.10.202-8

Model „Tube ø48,3 mm“ without cushions

SS-316 Brushed	# 22.10.203-0
SS-304 Brushed	# 22.10.203-9
Zamak Raw	# 22.10.203-8

EPDM-cushions to regulate glass thickness to be bought seperately

Optional:
Cover cap - silver color # 22.10.251

Mounting screw SS 304
for clamp fixing

M8 x 12 mm	# 22.10.248
M8 x 14 mm	# 22.10.249

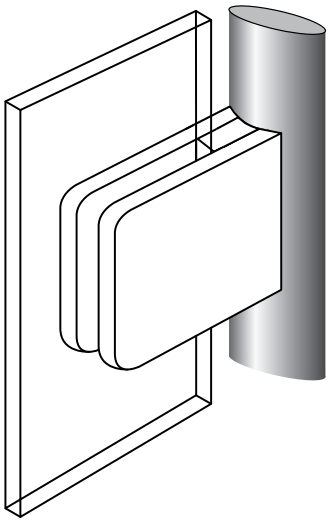

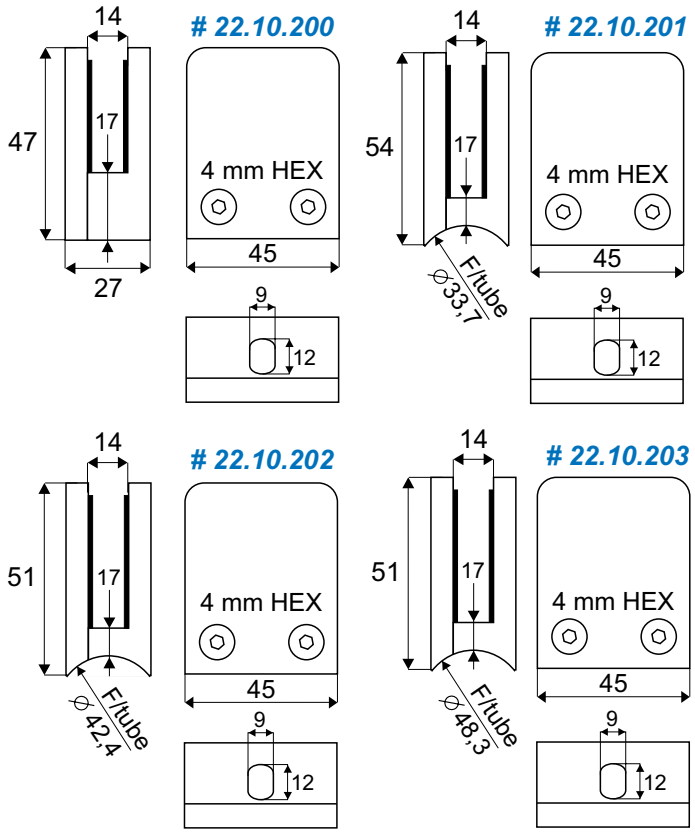

MODEL „SQUARE“	Glass thickness	Glass Type	Cushion mm	Item numbers		
	6	mono	4 + 5	22.10.207	+	22.10.208
	6,76	Lam.	4 + 4	22.10.207	+	22.10.207
	8	mono	3 + 4	22.10.206	+	22.10.207
	8,76	Lam.	3 + 3	22.10.206	+	22.10.206
	10	mono	2 + 3	22.10.205	+	22.10.206
	10,76	Lam.	2 + 2	22.10.205	+	22.10.205

STAINLESS STEEL & ZAMAK GLASS CLAMPS „OVAL-S“

Material: Brushed/polished stainless steel 304 & 316 or zamak, raw

Glass thickness: 6 - 10,76 mm

Size: 45 x 50 x 27 mm

Model „Flat“ without cushions

SS-316	Brushed	# 22.10.210-0
SS-316	Polished	# 22.10.260-0
SS-304	Brushed	# 22.10.210-9
Zamak	Raw	# 22.10.210-8

Model „Tube ø33,7 mm“ without cushions

SS-316	Brushed	# 22.10.211-0
SS-304	Brushed	# 22.10.211-9
Zamak	Raw	# 22.10.211-8

Model „Tube ø42,4 mm“ without cushions

SS-316	Brushed	# 22.10.212-0
SS-316	Polished	# 22.10.262-0
SS-304	Brushed	# 22.10.212-9
Zamak	Raw	# 22.10.212-8

Model „Tube ø48,3 mm“ without cushions

SS-316	Brushed	# 22.10.213-0
SS-304	Brushed	# 22.10.213-9
Zamak	Raw	# 22.10.213-8

EPDM-cushions to regulate glass thickness to be bought seperately

Optional:

Safety pins ø5,5 x 18 mm

White plastic	# 22.10.240
SS-304 w/tube	# 22.10.239

Cover cap - silver color # 22.10.251

Mounting screw SS 304 for clamp fixing

M8 x 12 mm	# 22.10.248
M8 x 14 mm	# 22.10.249

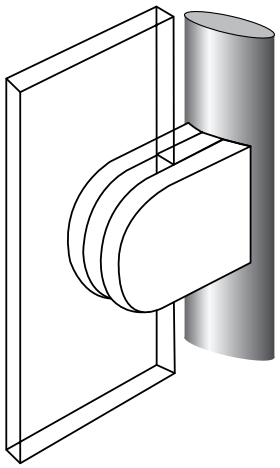

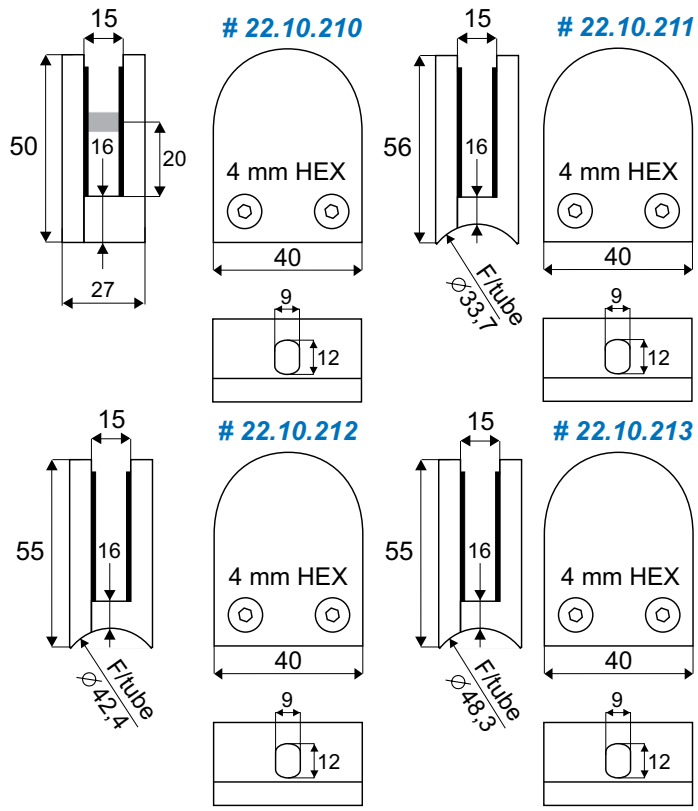

MODEL „OVAL-S”	Glass thickness	Glass Type	Cushion mm	Item numbers		
	6	mono	5 + 5	22.10.217	+	22.10.217
	6,76	Lam.	4 + 5	22.10.216	+	22.10.217
	8	mono	4 + 4	22.10.216	+	22.10.216
	8,76	Lam.	3 + 4	22.10.215	+	22.10.216
	10	mono	3 + 3	22.10.215	+	22.10.215
	10,76	Lam.	2 + 3	22.10.214	+	22.10.215

STAINLESS STEEL & ZAMAK GLASS CLAMPS „OVAL-L“

- high quality furniture fittings

Material: Brushed stainless steel 304 & 316 or zamak, raw
Glass thickness: 6 - 10,76 mm
Size: 45 x 64 x 26,5 mm

Model „Flat“ without cushions

SS-316 Brushed	# 22.10.220-0
SS-304 Brushed	# 22.10.220-9
Zamak Raw	# 22.10.220-8

Model „Tube ø33,7 mm“ without cushions

SS-316 Brushed	# 22.10.221-0
SS-304 Brushed	# 22.10.221-9
Zamak Raw	# 22.10.221-8

Model „Tube ø42,4 mm“ without cushions

SS-316 Brushed	# 22.10.222-0
SS-304 Brushed	# 22.10.222-9
Zamak Raw	# 22.10.222-8

Model „Tube ø48,3 mm“ without cushions

SS-316 Brushed	# 22.10.223-0
SS-304 Brushed	# 22.10.223-9
Zamak Raw	# 22.10.223-8

EPDM-cushions to regulate glass thickness to be bought seperately

Optional:

Safety pins ø7,5 x 19 mm

White plastic	# 22.10.241
SS-304 w/tube	# 22.10.242

Cover cap - silver color	# 22.10.251

Mounting screw SS 304 for clamp fixing

M8 x 12 mm	# 22.10.248
M8 x 14 mm	# 22.10.249

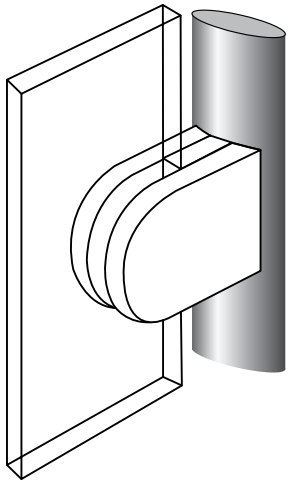

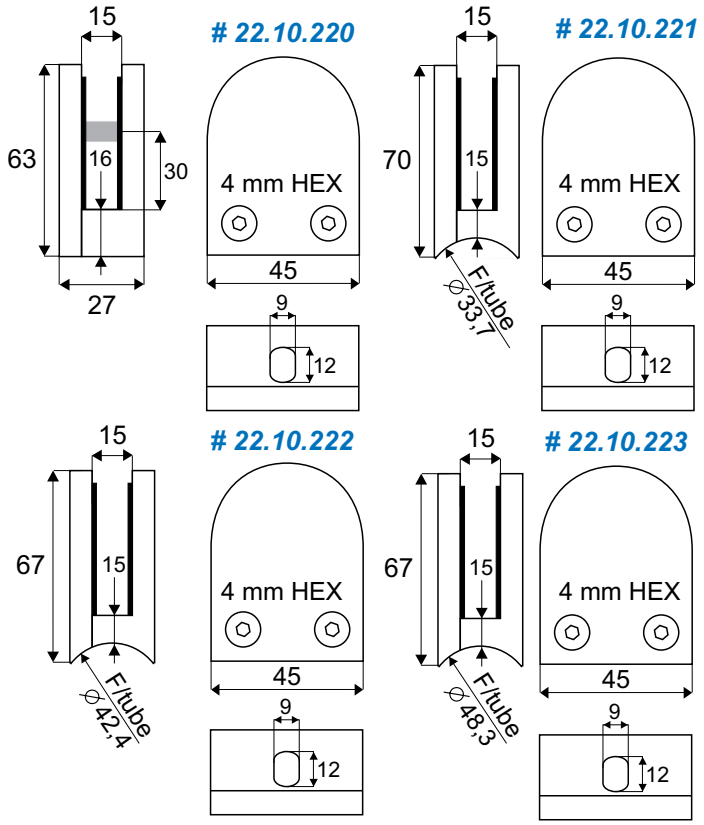

MODEL „OVAL-L”	Glass thickness	Glass Type	Cushion mm	Item numbers		
	6	mono	5 + 5	22.10.227	+	22.10.227
	6,76	Lam.	4 + 5	22.10.226	+	22.10.227
	8	mono	4 + 4	22.10.226	+	22.10.226
	8,76	Lam.	3 + 4	22.10.225	+	22.10.226
	10	mono	3 + 3	22.10.225	+	22.10.225
	10,76	Lam.	2 + 3	22.10.224	+	22.10.225

STAINLESS STEEL & ZAMAK GLASS CLAMPS „SQUARE“ W/ BOTTOM PLATE F/EASY MOUNTING

Material:
Brushed or polished stainless steel 304 & 316 or zamak, raw.

Glass thickness: 6,76 – 12,76 mm

Size: 45 x 47 x 30 mm

Specifications:
Flat back side.
W/stainless steel bottom plate
Without cushions (to be bought separately)

Item No:

Zamak raw	# 22.10.300
SS 304 brushed	# 22.10.310
SS 316 brushed	# 22.10.320
SS 316 polished	# 22.10.321

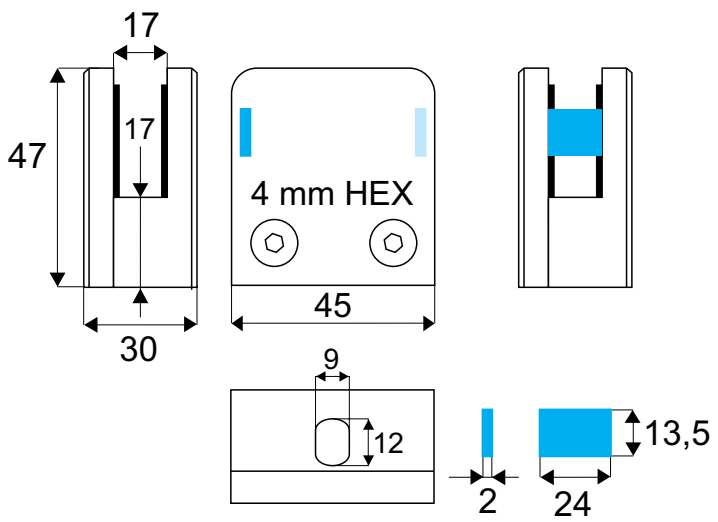

MODEL SQUARE	Glass thickness	Glass type	Cushion mm	Item numbers		
	6,76 mm	Lam.	6 + 6	22.10.209	+	22.10.209
	8 mm	Mono	5 + 6	22.10.208	+	22.10.209
	8,76 mm	Lam.	5 + 5	22.10.208	+	22.10.208
	10 mm	Mono	4 + 5	22.10.207	+	22.10.208
	10,76 mm	Lam.	4 + 4	22.10.207	+	22.10.207
	12 mm	Mono	3 + 4	22.10.206	+	22.10.207
	12,76 mm	Lam.	3 + 3	22.10.206	+	22.10.206

BALUSTER POSTS IN SS-304

- high quality furniture fittings

Application:
Baluster posts square or round tubes, for balconies, balustrades, stair cases etc.

Material:
Brushed stainless steel 304

Sizes:
40 x 40 x 960 x 1,5 mm
or ø42,2 x 960 x 1,7 mm

Specifications:
Supplied with pre-tapped holes for mounting of glass clamps.
Fixed or flexible handrail tops (not adjustable in the height)

Models:

Square w/fixed handrail top f/square tubes

W/ 2 through holes	# 22.10.350
W/ 2 holes on one side	# 22.10.351
W/ 2 holes on 2 sides for 90º angle	# 22.10.352

Square w/flexible handrail top f/square tubes

W/ 2 through holes	# 22.10.355
W/ 2 holes on one side	# 22.10.356
W/ 2 holes on 2 sides for 90º angle	# 22.10.357

Round w/fixed handrail top f/ø42,2 mm tubes

W/ 2 through holes	# 22.10.360
W/ 2 holes on one side	# 22.10.361
W/ 2 holes on 2 sides for 90º angle	# 22.10.362

Round w/flexible handrail top f/ø42,2 mm tubes

W/ 2 through holes	# 22.10.365
W/ 2 holes on one side	# 22.10.366
W/ 2 holes on 2 sides for 90º angle	# 22.10.367

Packing:
1 post incl. mounting screws M8 x 14 mm for fixing of glass clamps.
Incl. base cover & 4 floor plugs and screws

Glass clamps to be ordered separately.

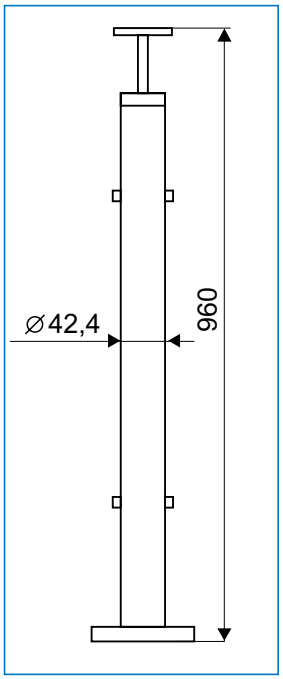

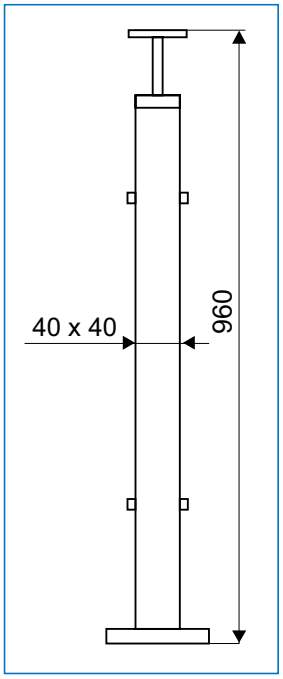

Flexible handrail top

MAGNETIC TOUCH LATCHES

MAGNETIC TOUCH LATCH
Knock in type
- No striker included

Finish: Black Plastic # 22.01.095
Bore: Ø 11 x 38 mm

Packing
350 pcs per box
2800 pcs per export carton

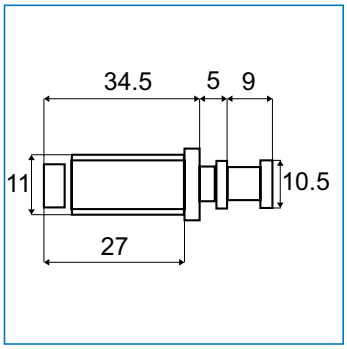

MAGNETIC TOUCH LATCH
- SINGLE
Screw on - No striker included
- round type

Finish: black plastic # 22.01.070
Fixation: c.c. 22 mm

Packing
250 pcs per box
1000 pcs per export carton

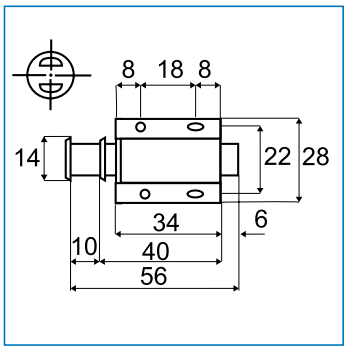

MAGNETIC TOUCH LATCH
- DOUBLE
Screw on - no striker included
- round type

Finish: black plastic # 22.01.088
Fixation: c.c. 18 mm/51 mm

Packing
500 pcs per box

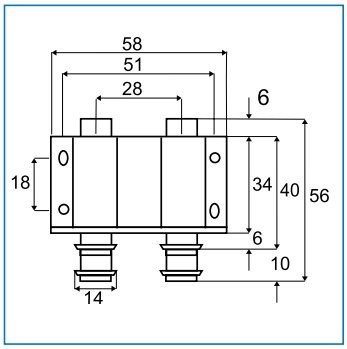

MAGNETIC TOUCH LATCH
- SINGLE
Screw on - no striker included
- square type

Finish: black plastic # 22.01.075
Fixation: c.c. 32 mm

Packing
250 pcs per box
1000 pcs per export carton

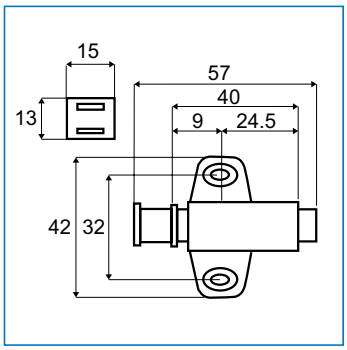

MAGNETIC TOUCH LATCH
- DOUBLE
Screw on - no striker included
- square type

Finish: black plastic # 22.01.087
Fixation: c.c. 32 mm/64 mm

Packing
125 pcs per box
500 pcs per export carton

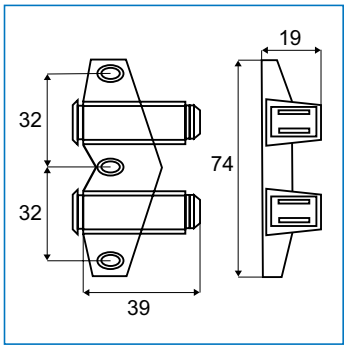

ROUND STRIKER - SELF ADHESIVE
For Rigid Fixation
- Stick On Type

Material: Steel
Nickel plated # 22.01.118
Diameter: Ø 19 mm

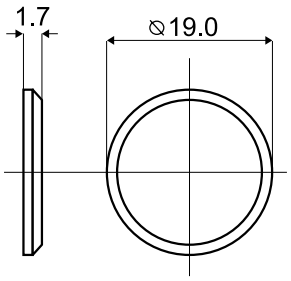

SQUARE STRIKER - SELF ADHESIVE
For Rigid Fixation
- Stick On Type

Material: Steel
Nickel plated # 22.01.127

Size: 26 x 22 mm

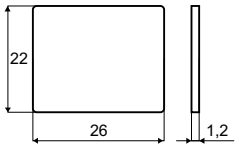

CATCH PLATE - GLASS
with Handle & Pad
Size: 23 x 40 mm

Material: Steel
Chrome plate # 22.03.015
Black anodized # 22.03.016
Brass plated # 22.03.017

Packing
200 pcs per box
1000 pcs per export carton

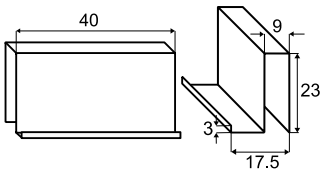

CATCH PLATE - GLASS
With Handle
Model: #558
Size: 20 x 20 mm

Material: Steel
Black anodized # 22.03.018

Packing
200 pcs per box
2000 pcs per export carton

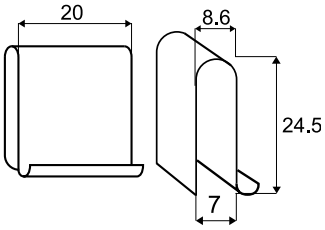

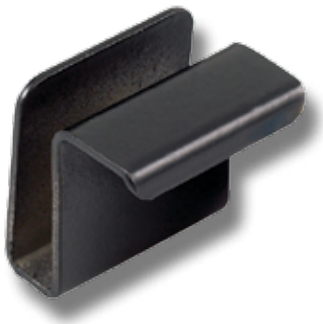

CATCH PLATE - GLASS
With Pad
Size: 40 x 25 mm

Material: Steel
Brass plated # 22.03.100
Black anodized # 22.03.111
Chrome plated # 22.03.115

Packing
200 pcs per box
1000 pcs per export carton

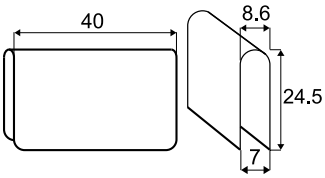

GLASS DOOR HINGES „MINI“ WITH FRONT COVER

AUTOMATIC GLASS DOOR HINGE WITH DOUBLE SPRING ACTION
Opening angle: 92º
Glass door drilling:
26 mm for glass thickness 4 to 6 mm
Supplied complete with wing mounting plate.
Steel nickel pl. 3 mm distance for chipboard screw attachment
housing: plastic black
Hingearm keyhole type, steel nickel pl.

TYPE A = FULL OVERLAY DOORS
0 mm cranking # 15.01.700

TYPE C = INSET DOORS
17 mm cranking # 15.01.710

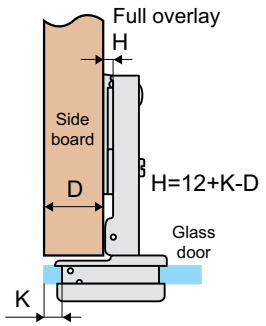

Application case of glass hinge Ø26 mm
H - height of mounting plate
D - panel thickness
K - drilling distance from the edge of glass door to the edge of the hole
A - gap between door and side board

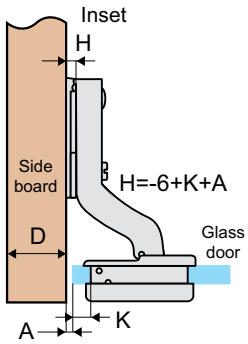

D \ K / H	3	4	5	6	7
0	15	16	17	18	19

A \ K / H	3	4	5	6	7
0	3	2	1	0	-1

COVER CAPS FOR HINGE „MINI“

FRONT COVER PLASTIC

Round cover, chrome	# 15.02.720
Round cover, gold	# 15.02.721
Round cover, black	# 15.02.722
Round cover, alu	# 15.02.723
Round cover, matt NPL	# 15.02.724
Oval cover, chrome	# 15.02.730
Oval cover, gold	# 15.02.731
Oval cover, black	# 15.02.732
Oval cover, alu	# 15.02.733
Oval cover, matt NPL	# 15.02.734

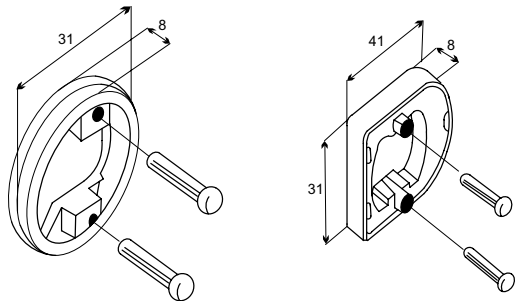

GLASS DOOR HINGE „SMART-92°“ WITH FRONT COVER

GLASS DOOR HINGE „SMART-92°“

Application
For inset doors. Ideal for furniture where only a very narrow wooden side-wall/pole is available.
Direct fixing to side-wall/pole without any mounting plate

Mounting
Glass door drilling: Ø26 mm
Glass thickness: 4-6 mm
C.C. 32 mm

Material
Hinge arm: Zamak, nickel plated
Hinge cup: Black plastic
Item No. # 15.01.000

Plastic cover cap Ø32 mm

Finish
Alu finish # 15.01.050

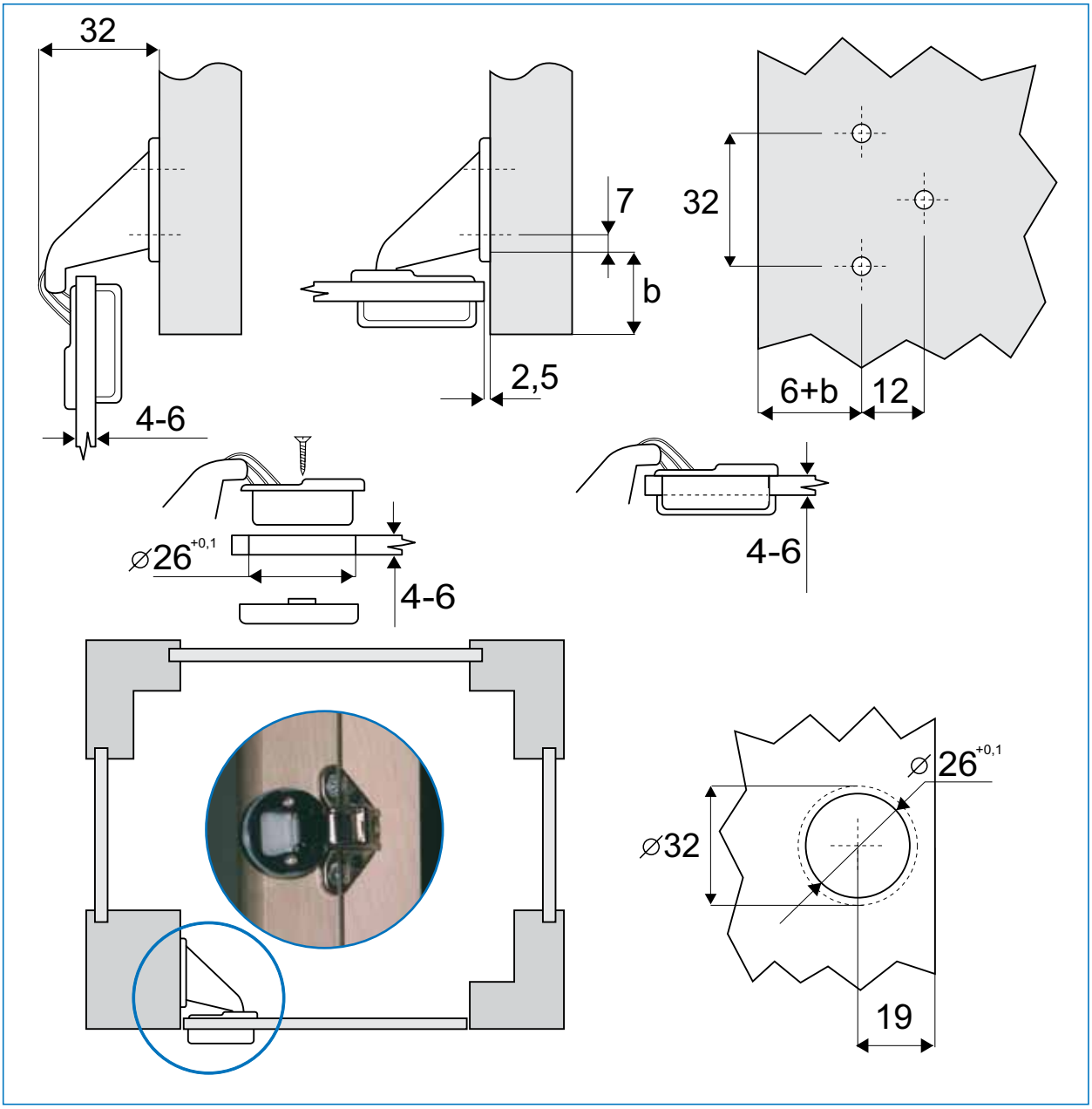

SOFT CLOSE MINI
GLASS DOOR HINGE Ø 26 MM - 95°

Hinge w/mounting plate f/easy up & down adjustment (optional)

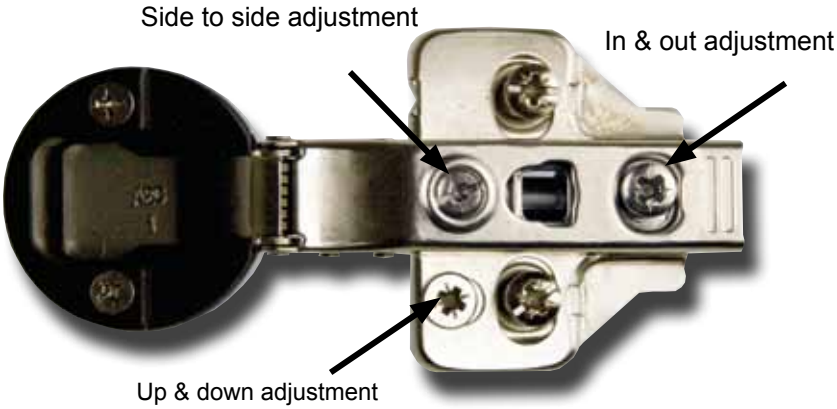

H =	height of mounting plate
D =	required door overlay
K =	drilling distance from the edge of door to the edge of the cup hole
A =	gap between door and sidepanel

Full overlay (A)

D= 17,5 mm

Half overlay (B)

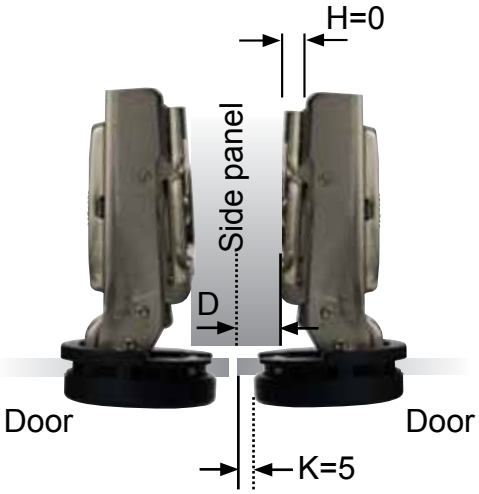

D= 8,5 mm

Inset (C)

A= 1,0 mm

SOFT CLOSE MINI
GLASS DOOR HINGE Ø 26 MM - 95°

- high quality furniture fittings

SISO DENMARK

Cup drawing

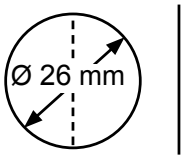

Opening angle:	95°
Depth of hinge cup:	10,6 mm
Diameter of hinge cup:	26 mm
Possible drilling distances on the glass door (K):	4-7 mm
Glass door thickness:	4-6 mm

Steel - Nickel Plated		Item No.	D: Overlay calculations A: Gap calculations
Full overlay (A)	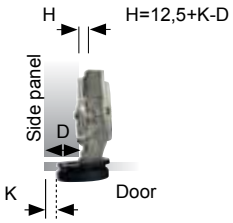	15.01.720 Incl. SISO name plate + mounting plate H = 0	
Half overlay (B)	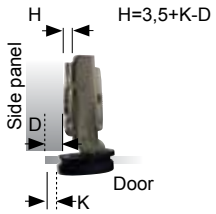	15.01.721 Incl. SISO name plate + mounting plate H = 0	
Inset (C)	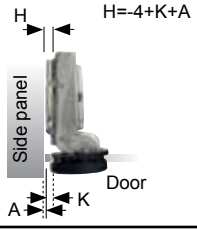	15.01.722 Incl. SISO name plate + mounting plate H = 0	
	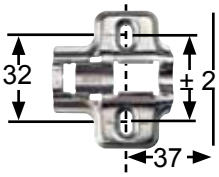	H = 0 f/chipboard screws Clip-on	Delivered as standard mounting plate with all hinges. Chipboard screws to be ordered separately.
	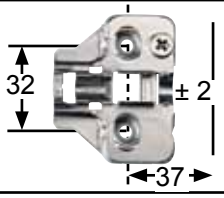	15.03.728 H = 0 f/euro screws Clip-on	To be ordered separately if easy up & down adjustment is wanted. Pre-mounted euro screws included.

D K / H	3	4	5
0	15,5	16,5	17,5
2	13,5	14,5	15,5
4	11,5	12,5	13,5

D K / H	3	4	5
0	6,5	7,5	8,5
2	4,5	5,5	6,5
4	2,5	3,5	4,5

A K / H	3	4	5
0	1	0	-1
2	3	2	1

15.01.830 , ABS
Chrome plated cover

15.01.831 , ABS
Alu plated cover

15.01.820 , ABS
Chrome plated cover

15.01.821 , ABS
Alu plated cover

SOFT CLOSE MAXI
GLASS DOOR HINGE Ø 35 MM -100º

Standard model

Hinge w/mounting plate f/easy up & down adjustment (optional)

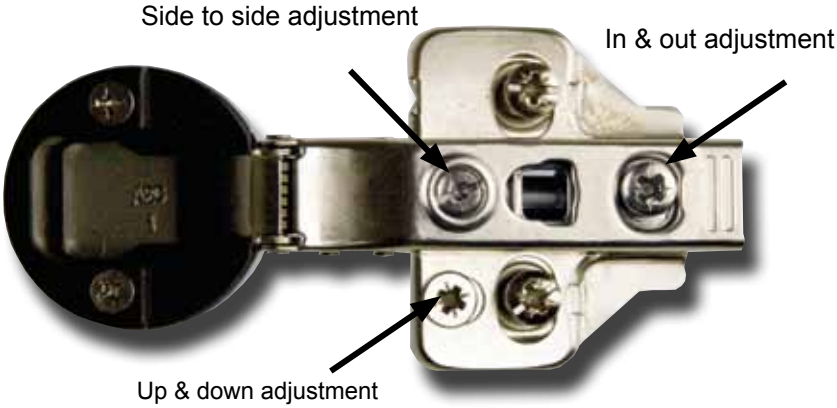

H =	height of mounting plate
D =	required door overlay
K =	drilling distance from the edge of door to the edge of the cup hole
A =	gap between door and sidepanel

Full overlay (A)

D= 19 mm

Half overlay (B)

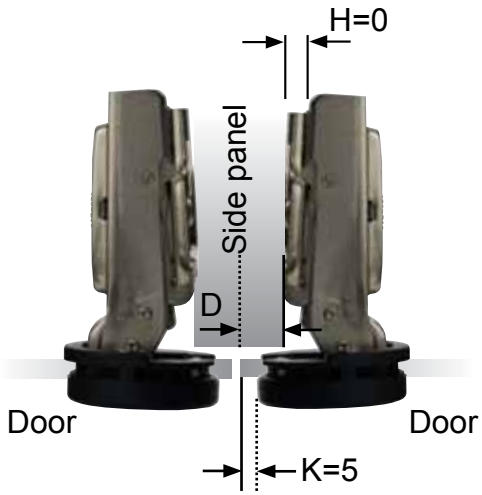

D= 10 mm

Inset (C)

A= 0,5 mm

SOFT CLOSE MAXI
GLASS DOOR HINGE Ø 35 MM -100°

- high quality furniture fittings

SISO DENMARK

Cup drawing

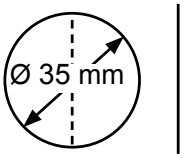

Opening angle:	100°
Depth of hinge cup:	11,3 mm
Diameter of hinge cup:	35 mm
Possible drilling distances on the glass door (K):	4-8 mm
Glass door thickness:	4-6 mm

Steel - Nickel Plated		Item No.	D: Overlay calculations / A: Gap calculations
Full overlay (A)	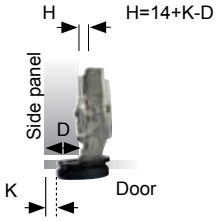	15.01.715 Incl. SISO name plate + mounting plate H = 0	
Half overlay (B)	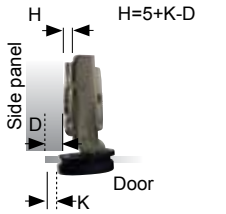	15.01.716 Incl. SISO name plate + mounting plate H = 0	
Inset (C)	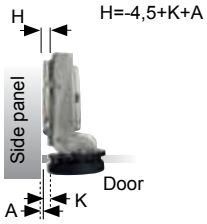	15.01.717 Incl. SISO name plate + mounting plate H = 0	
	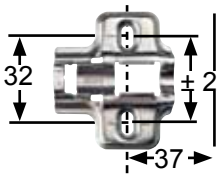	H = 0 f/chipboard screws Clip-on	Delivered as standard mounting plate with all hinges. Chipboard screws to be ordered separately.
	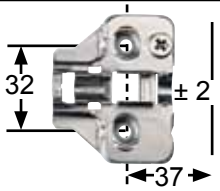	15.03.728 H = 0 f/euro screws Clip-on	To be ordered separately if easy up & down adjustment is wanted. Pre-mounted euro screws included.

D \ K / H	3	4	5	6	7
0	17	18	19	20	21
2	15	16	17	18	19
4	13	14	15	16	17

D \ K / H	3	4	5	6	7
0	8	9	10	11	12
2	6	7	8	9	10
4	4	5	6	7	8

A \ K / H	3	4	5	6	7
0	1,5	0,5	0,5	-1,5	-2,5
2	3,5	2,5	1,5	0,5	-0,5
4	5,5	4,5	3,5	2,5	1,5

15.01.810 , ABS
Chrome plated cover

15.01.811 , ABS
Alu plated cover

15.01.800 , ABS
Chrome plated cover

15.01.801 , ABS
Alu plated cover

GLASS DOOR HINGE „NICE“

MODEL „NICE“

Finish
Chrome plated w/catch # 15.06.450
Chrome plated no catch # 15.06.455

Material
Solid brass polished
Brass chrome bright

Mounting
Inset doors 5-6 mm thickness without catch
Opening angle: 105°
universal top or bottom
height can be adjusted
Drill size 19 mm diam.

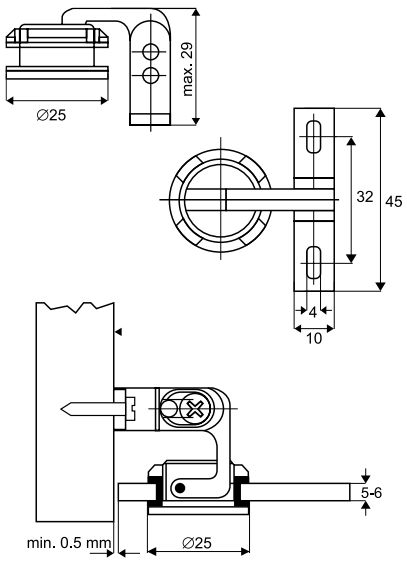

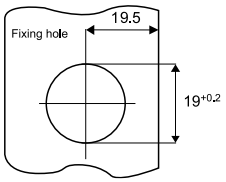

GLASS DOOR HINGE „ELEGANT“

MODEL „ELEGANT“

Material
Natural brass

Finish
Brushed natural brass # 15.06.460
Brushed nickel # 15.06.461

Mounting
Inset doors 6 mm thickness
Opening 270°
Drill size 12 mm

Packing
40 pcs

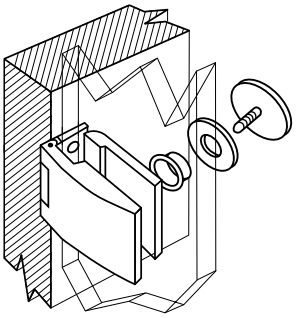

Fixing hole

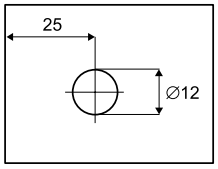

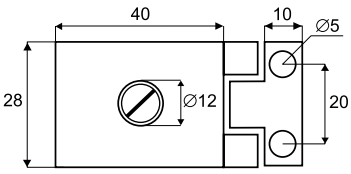

GLASS DOOR HINGE „GRACE“ SS304 FOR WOOD/GLASS

MODEL „GRACE“

Mounting: Glass: ø 10 mm boring holes
Wood: 7 x 4 mm screw holes
Material: Stainless steel 304 - polished
Hinge size: 52 x 31 x 13 mm (H/W/D)
Glass thickness: 5 - 8 mm
Max door size: 650 x 900 mm
Max door weight: 6 kg per hinge

Function: Inset or half-overlay
Opening 180°

Inset: # 15.06.470
Half-overlay: # 15.06.471

Each hinge is supplied with 2 white cushions 1 mm thickness

Inset

Half-overlay

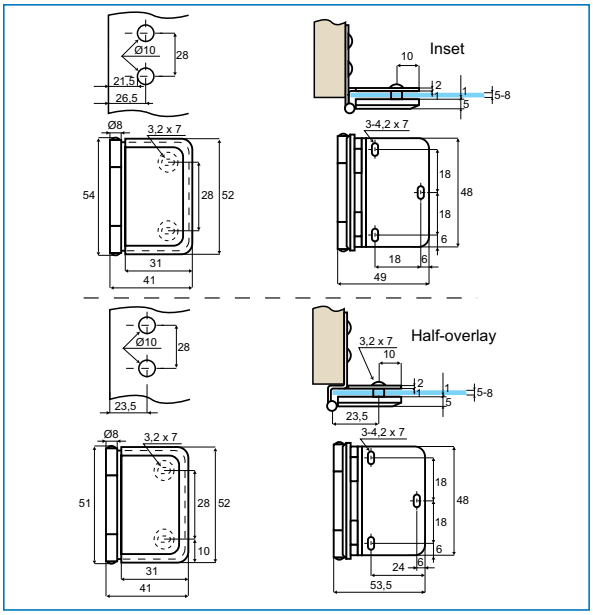

GLASS DOOR HINGE "SOFIA"
GLASS TO GLASS 180°

- high quality furniture fittings

Application:
Suitable for glass door
Drilling/cutting required

Opening: 180°
Glass thickness: 6 mm
Material: Brass

1 hinge consists of:
1 hinge 54,5 x 73 mm
4 transparent cushions 1 mm thickness
4 transparent tubes ø 12 mm
1 L-shaped hex key 4 mm

Finish:
Chrome plated # 15.23.050

Packing:
20 pcs per carton

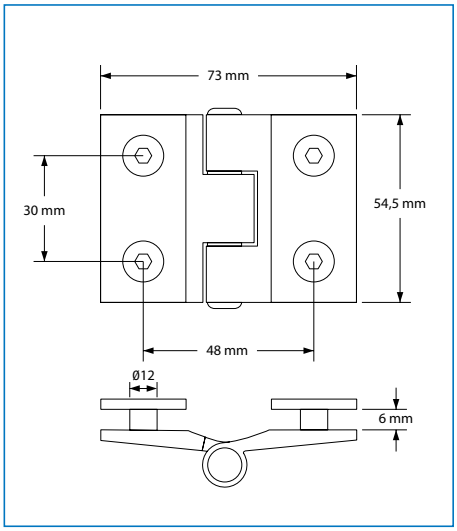

GLASS DOOR HINGE „ROME“
GLASS TO GLASS 180°

Application:
Suitable for glass door
Drilling/cutting required

Opening: 180°
Glass thickness: 6 - 8 mm
Material: Brass

1 hinge consists of:
1 hinge 100 x 40 mm
4 transparent cushions 1 mm thickness
2 transparent tubes ø 12 mm
1 L-shaped hex key 4 mm

Finish:
Chrome plated # 15.23.055

Packing:
20 pcs per carton

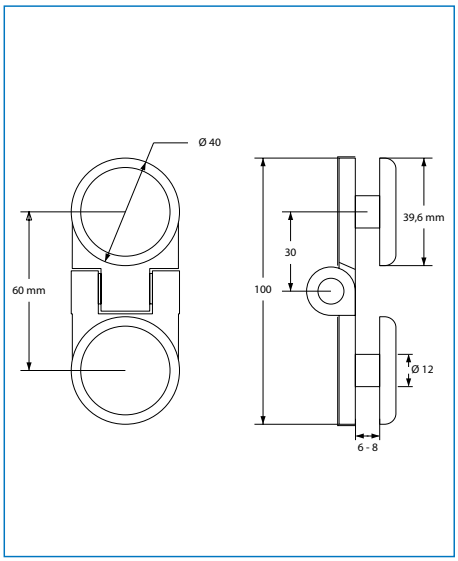

GLASS CLAMP „ROME“
WALL TO GLASS 90°

Application:
Suitable for glass door
Drilling/cutting required

Angle: 90°
Glass thickness: 6 - 8 mm
Material: Brass

1 clamp consists of:
1 clamp 50 x 50 mm
2 transparent cushions 1 mm thickness
1 transparent tubes ø 12 mm
2 cover caps
1 L-shaped hex key 4 mm
1 wall plug
1 wall mounting screw

Finish:
Chrome plated # 15.23.770

Packing:
20 pcs per carton

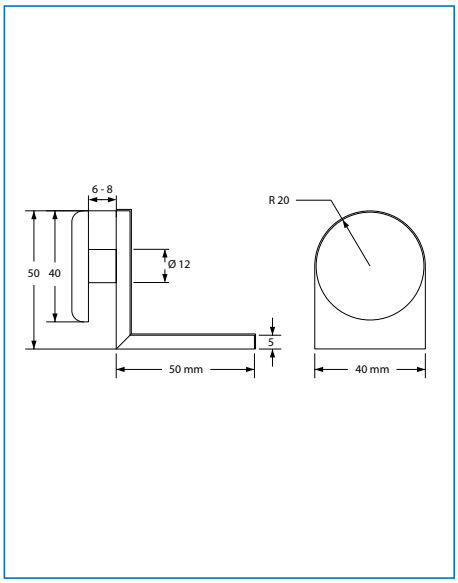

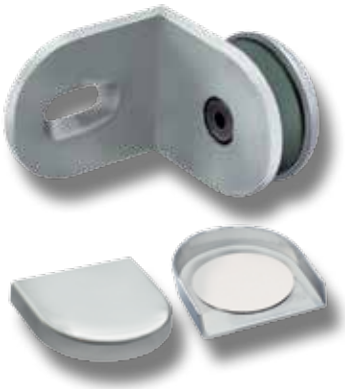

GLASS DOOR HINGE „BOSCH“ GLASS/GLASS

Model „BOSCH“

Material
3 mm brass

Hinge size: 30 x 80 mm (H/W)

Function
Inset or overlay doors
Glass thickness: 6 mm
Opening angle: 270º
Drilling: ø 9 m

Finish
Chrome plated # 15.06.500

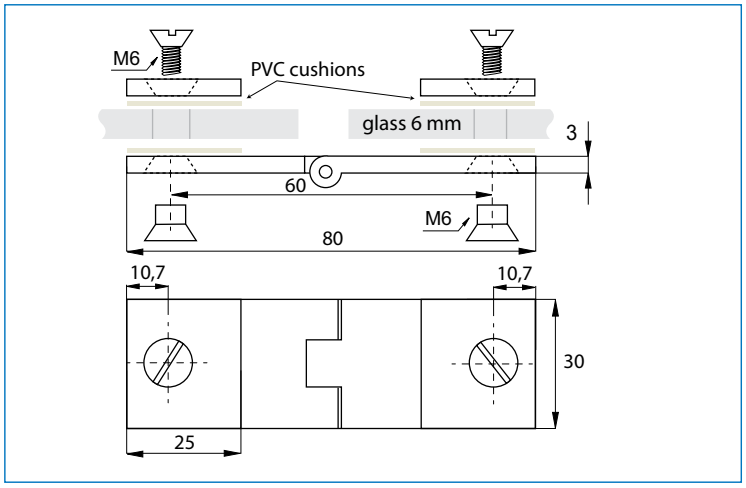

BRASS GLASS DOOR HINGE „SWAN“ F/6-8 MM GLASS

MODEL „SWAN“

Finish
Gold plated # 15.30.000
Chrome plated # 15.30.001

Material
Brass

Consists of
1 hinge 60 x 30 mm
2 cork cushions
1 brass screw M6 x 10 mm, 4 mm hex

Function
Inset doors, max 6-8 mm glass thickness
Max door size 1400 x 700 mm
ø12 mm drilling hole
Opening angle 90º

Packing
200 pcs per export carton

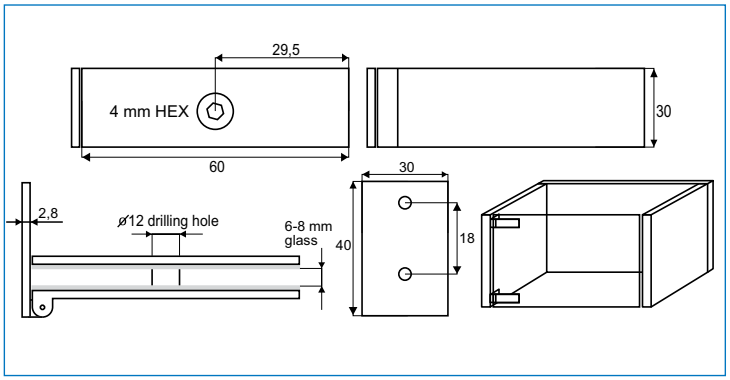

LIFT-OFF BUTT HINGE SS304 FOR UV-GLUE

- high quality furniture fittings

Mounting: By UV-glue B 682-0 from Bohle.
UV-lamp is needed

Material: 2,5 mm stainless steel 304 - polished

Hinge size: 65 X 60 mm (H/W)

Function: Inset doors
Max door width 500 mm
Load capacity: 7,5 KG per pair
Opening angle 270º
Glass thickness: 4-8 mm

Right hand: # 15.13.590
Left hand: # 15.13.600

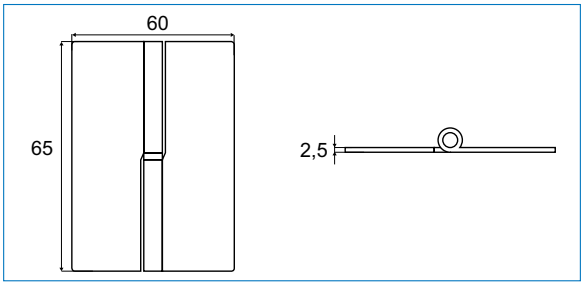

BUTT HINGE SS304 FOR UV-GLUE

Mounting: By UV-glue B 682-0 from Bohle.
UV-lamp is needed

Material: 2 mm stainless steel 304 - polished

Hinge size: 65 x 50 mm (H/W)

Function: Inset doors
Max door width 500 mm
Load capacity: 7,5 KG per pair
Opening angle 270º
Glass thickness: 4-8 mm

Item No: # 15.13.105

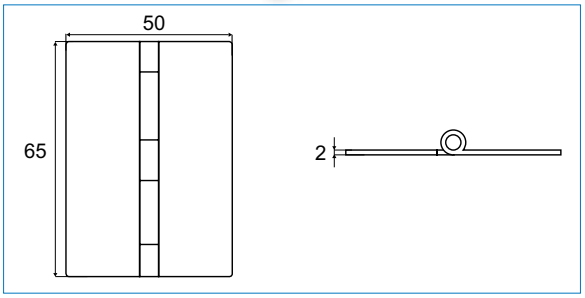

GLASS DOOR HINGE BRASS FOR UV-GLUE

Mounting:
By UV-glue B 682-0 from Bohle
UV-lamp is needed
Material:
2,9 mm Brass - Chrome Plated
Hinge size: 60 x 60 mm (H/W)

Function:
Inset doors
Max door width 500 mm

Load Capacity: 7,5 Kg per pair
Opening: 270º
Glass thickness: 4-8 mm

Finish:
Chrome Plated (CPL) # 15.13.110
SS-Look (nickel brushed) # 15.13.111

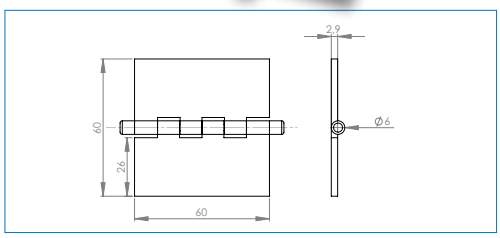

GLASS DOOR HINGE 11.300 - NO DRILLING

MODEL
No. 11.300 **inset doors**

Material: Steel
Chrome plated # 15.06.036
Brass plated # 15.06.035
Black anodized # 15.06.037
Alu finish # 15.06.038

Mounting: Top + Bottom
Inset Doors, max 4-6 mm
Complete with nylon bushings

Front plate:
Size: 50 x 23 mm - polished

Matching handle:
See page 31

Packing:
Each pair (Right + Left)
is packed in a polybag complete
with bushings & steel screws w/soft tip

BALL CATCH # 15.06.076
Material: Brass
Size: Ø 8 mm x 13 mm

Optional, to be ordered separately

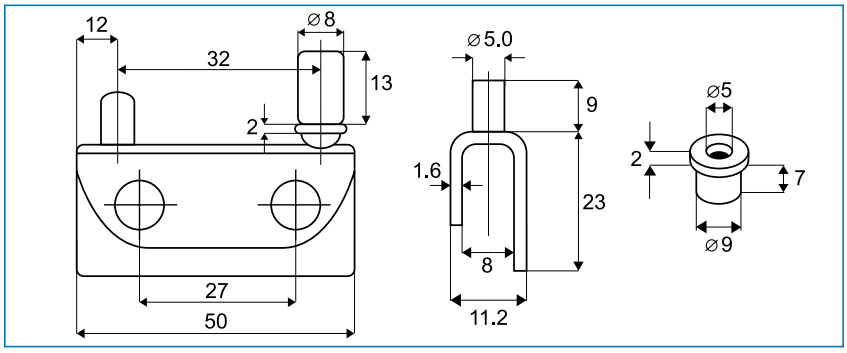

GLASS DOOR HINGE 11.561 - NO DRILLING

MODEL
No. 11.561 **inset doors**

Material: Steel
Chrome plated # 15.06.096
Brass plated # 15.06.091
Black anodized # 15.06.095
Alu finish # 15.06.098

Mounting: Top + Bottom
Inset Doors, max 5 mm
Complete with nylon bushings
& sleeve

Front plate:
Size: 40 x 15 mm - polished

Matching handle:
See page 31

Packing:
Each pair (Right + Left) is packed
in a polybag complete with bushings
& sleeves.
500 pairs per box

BALL CATCH # 15.06.076
Material: Brass
Size: Ø 8 mm x 13 mm
Optional, to be ordered separately

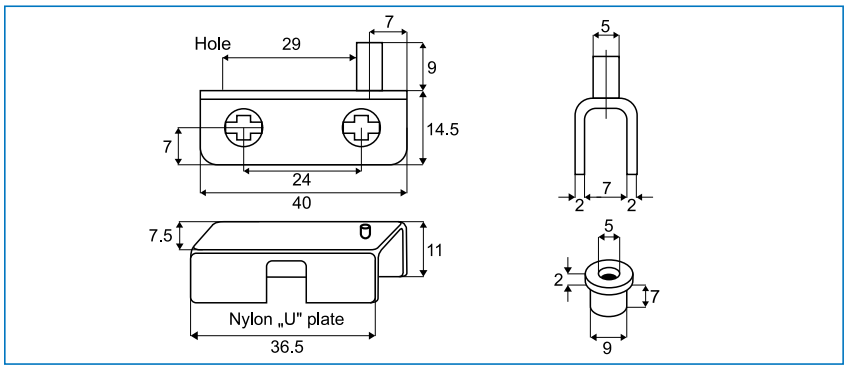

GLASS PIVOT HINGE „STAINLESS STEEL“ - NO DRILLING

MODEL „SMALL“

Mounting:
Inset doors. Complete with brass bushings & soft tip screws

Material:
2 mm stainless steel, polished

Hinge size: 42 x 20 x 13 mm (W/H/D)
Bushing size: ø9 x 8 mm
Glass thickness: 6 mm

Item No. # 15.06.060

Packing:
70 pairs per carton

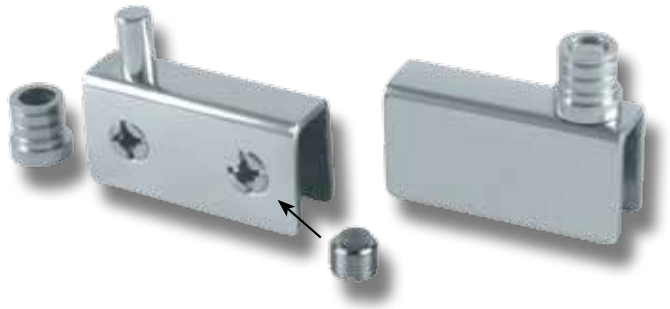

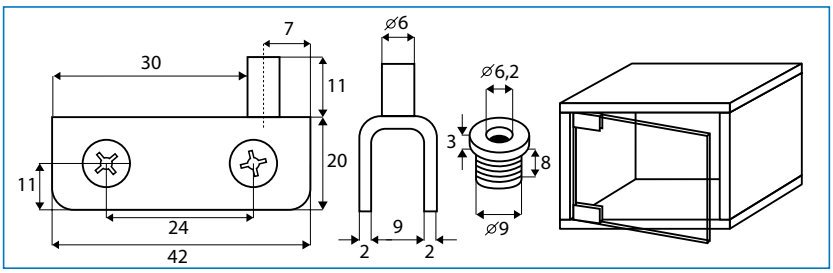

MODEL „MEDIUM“

Mounting:
Inset doors. Complete with brass bushings & soft tip screws

Material:
2 mm stainless steel, polished

Hinge size: 52 x 26 x 16 mm (W/H/D)
Bushing size: ø10 x 9 mm
Glass thickness: 8 mm

Item No. # 15.06.062

Packing:
70 pairs per carton

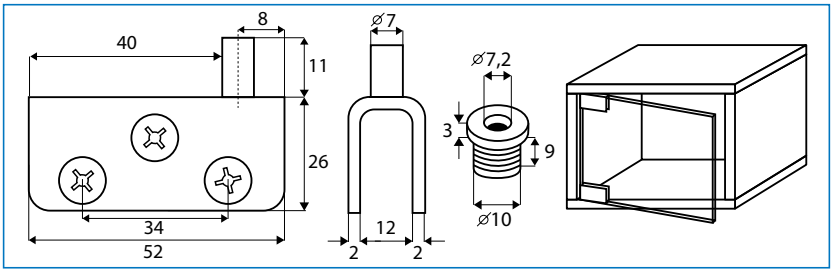

MODEL „LARGE“

Mounting:
Inset doors. Complete with brass bushings & soft tip screws

Material:
2 mm stainless steel, polished

Hinge size: 71 x 35 x 17 mm (W/H/D)
Bushing size: ø10 x 9 mm
Glass thickness: 10 mm

Item No. # 15.06.064

Packing:
70 pairs per carton

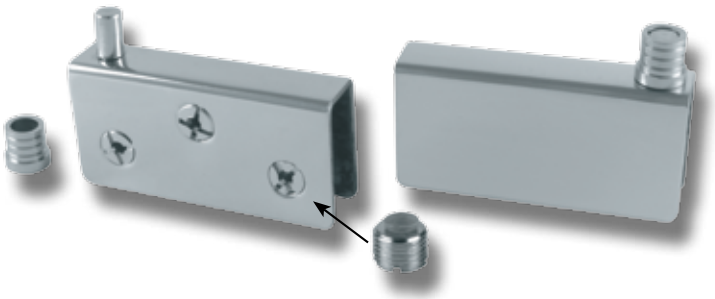

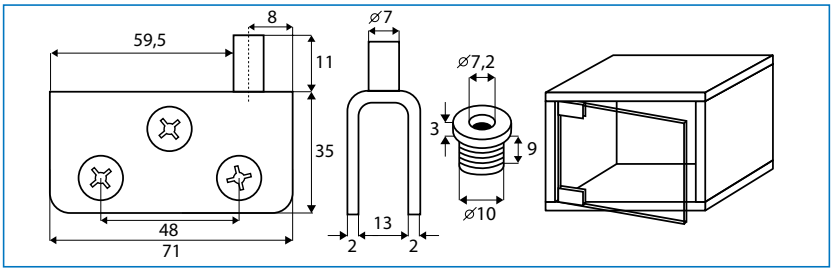

GLASS PIVOT HINGE „BRASS“ - NO DRILLING

Mounting: Inset doors. Complete with brass bushings & soft tip screws

Material:	3 mm brass
Hinge size:	42 x 27 x 16 mm (W/H/D)
Bushing size:	Ø 8 x 11 mm
Glass thickness:	4 - 8 mm
Chrome plated	# 15.06.070
Alu finish	# 15.06.071

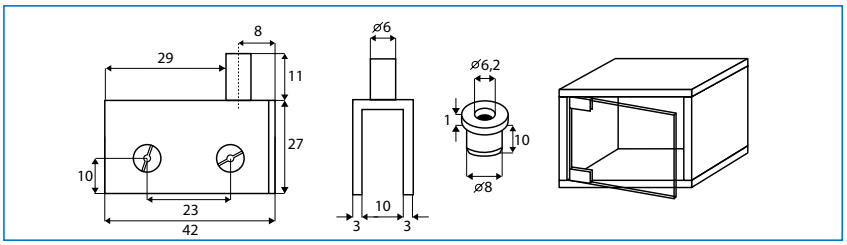

GLASS DOOR HINGE A-11 - NO DRILLING

MODEL NO. A-11	**w/Catch inset doors**
Material:	Zamak
Chrome plated	# 15.06.126
Brass plated	# 15.06.120
Black anodized	# 15.06.127

Mounting:
Inset doors, max 5-6 mm
Side fixation

Front plate:
Size: 25 x 25 mm - framed & sparkled

Matching handle:
A-10

Packing:
Each pair (Right + Left) incl. pads/cushions is packed in a polybag
200 pairs per box

(Optional)

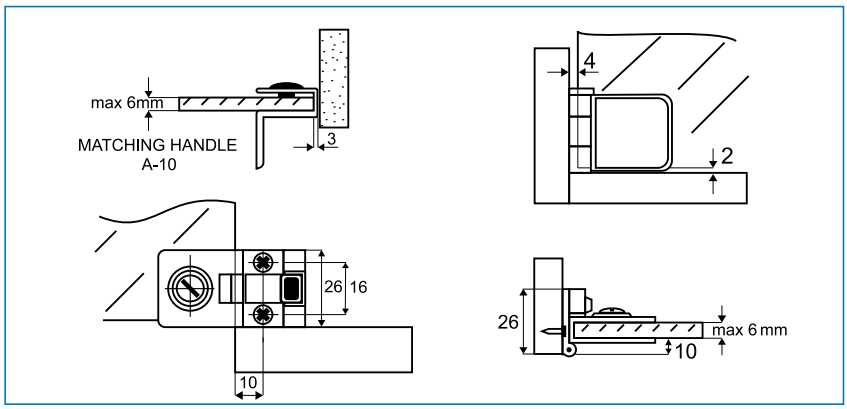

GLASS DOOR HINGE 11-100
- NO DRILLING

MODEL NO. 11.100 — **w/Catch inset doors**

Material: Zamak
Chrome plated # 15.06.025

Mounting: Side fixation
Inset doors, max 4-6 mm
Max door size: 800 x 350 mm
- 4 kilos

Front plate:
Size: 27 x 23 mm, sparkled

Matching handle:
11.200

Packing:
Each pair (Right + Left)
incl. pads/cushions is packed
in a polybag
40 pairs per box
200 pairs per export carton

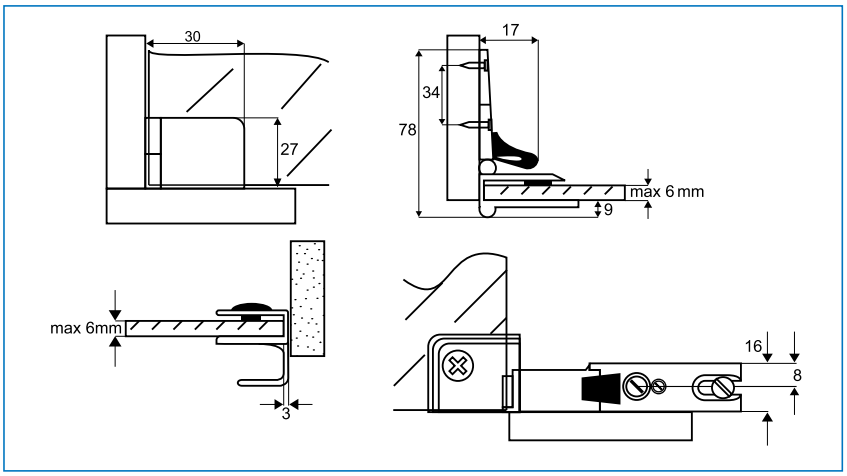

GLASS DOOR HINGE D-13/2
- NO DRILLING

MODEL w/Catch
NO. D 13/2 inset doors

Material: Zamak
Chrome plated # 15.06.102
Bronze plated # 15.06.103
Black anodized # 15.06.105

Mounting:
Inset doors, max 5 mm
Max door size 1000 x 600 mm

Front plate:
Size 40 x 30 mm
sparkled

Maching handle:
D-12, D-12/2, D-120

Packing:
Each pair (right + left) incl. pads/cushions
is packed in a polybag
50 pairs per box
200 pairs per export carton

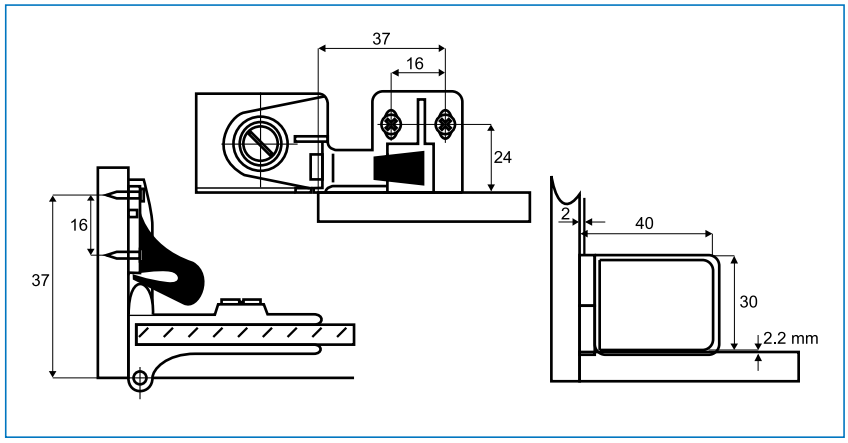

GLASS DOOR HINGE D-16 - NO DRILLING

MODEL **w/Catch**
D-16 **OVERLAY DOORS**

Material
Zamak

Finish
Chrome plated # 15.06.415
Brass plated # 15.06.410
Black anodized # 15.06.420

Mounting
Overlay doors, max 5 mm

Front plate
Size: 40 x 30 mm, sparkled

Matching handle
D-12, D-12/2 & D-120

Packing
Each pair (Right + Left)
incl. pads/cushions is packed
in a polybag
150 pairs per box

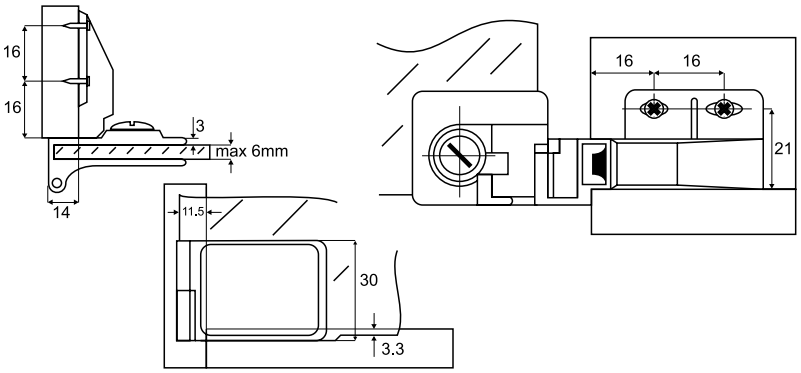

GLASS DOOR HINGE C-13 CENTER - NO DRILLING

MODEL **w/Catch**
C-13 **INSET DOORS**

Material Zamak L/R
Chrome plated # 15.06.311/321
Brass plated # 15.06.310/320
Bronze plated # 15.06.312/322
Black anodized # 15.06.313/323

Mounting
Inset doors, max 5 mm
Centre- or Top fixation for
rounded doors

Front plate
Size: 40 x 30 mm - framed
& sparkled

Matching handle
D-12, D-12/2 & D-120

Packing
100 pairs per box
400 pairs per export carton

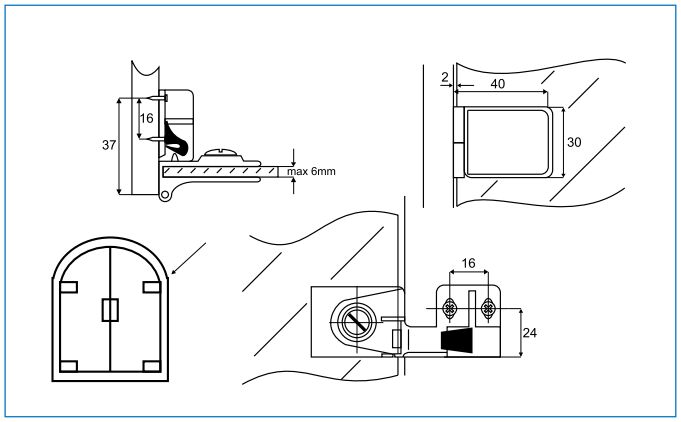

GLASS DOOR PULL F/SLIDING DOORS

GLASS DOOR PULL FOR SLIDING DOORS

Material: Brass

Ø30 x 9 mm - bore Ø 26 mm

Finish

Chrome plated	# 17.40.100
Alu finish	# 17.40.101
Mat nickel	# 17.40.102
Polish brass	# 17.40.103
Satin brass	# 17.40.104

Ø43 x 9 mm - bore Ø 35mm

Finish

Chrome plated	# 17.40.110
Alu finish	# 17.40.111
Matt nickel	# 17.40.112

For glass thickness 4 - 8 mm

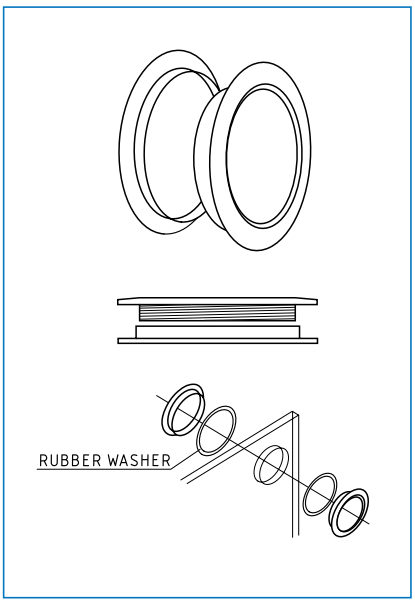

GLASS DOOR HANDLE - NO DRILLING

MODEL **w/Clamp Screw**
A-10 **SINGLE DOOR**
Material: Zamak

Chrome plated	# 17.40.032
Brass plated	# 17.40.030
Black anodized	# 17.40.031

Packing:
500 pcs per export carton

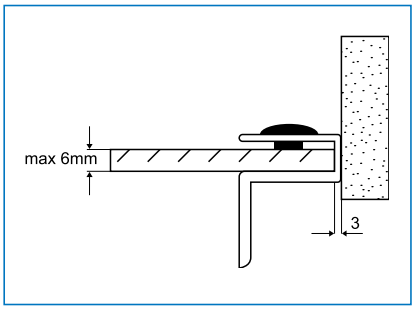

MODEL **w/Clamp Screw**
11-200 **SINGLE DOOR**
Material: Zamak

Chrome plated	# 17.40.011
Nickel plated	# 17.40.010

Packing:
500 pcs per box

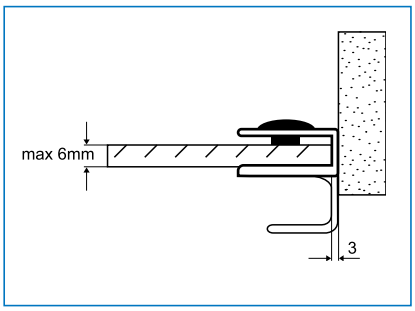

MODEL **w/Clamp Screw**
D-12/2 **SINGLE DOOR**
Material: Zamak

Chrome plated	# 17.40.018
Black anodized	# 17.40.017
Finish:	Sparkled

Packing:
50 pcs per box
400 pcs per export carton

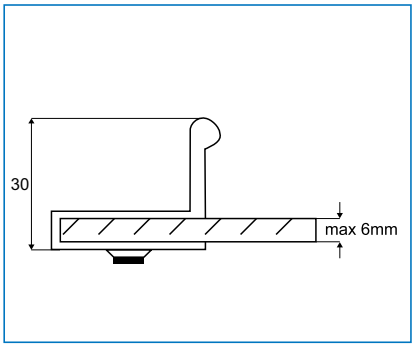

MODEL **w/Clamp Screw**
D-120 **DOUBLE**
DOORS
Material: Zamak

Chrome plated	# 17.40.041
Brass plated	# 17.40.040
Bronze plated	# 17.40.042
Black anodized	# 17.40.046
Finish:	Sparkled

Packing:
50 pcs per box
400 pcs per export carton

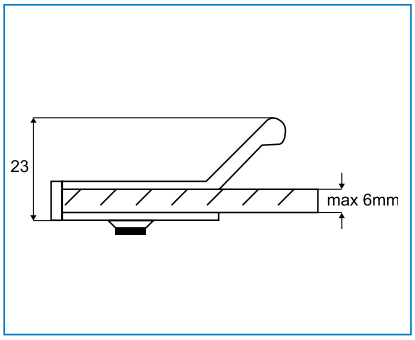

MIRROR MOVEMENT NO. 117

Application
For turnable mirrors w/wood frame

Material
Steel

Screw holes ø4 mm

Finish
Brass plated # 22.05.055
Bronze plated # 22.05.056
Nickel plated # 22.05.057

Packing: 200 sets per carton

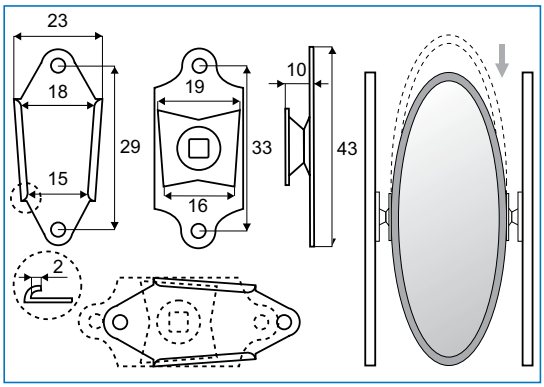

MIRROR MOVEMENT NO. 88

Application
For turnable mirrors w/wood frame

Material
Steel

Screw holes ø4 mm

Finish
Brass plated # 22.05.050
Bronze plated # 22.05.051
Nickel plated # 22.05.052

Packing: 200 sets per carton

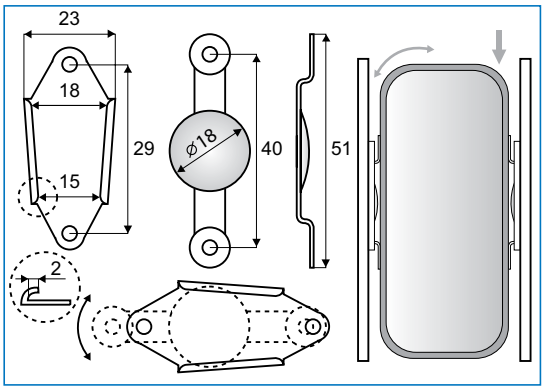

MIRROR OR GLASS CLIP

Application
For safe mounting of mirrors or other glass panels of 4 mm thickness

Material
Plastic transparent

Screw holes ø3 mm

Item No. # 22.05.200

Option
also available for other glass thickness upon special request or inquiry.
Other colour available.

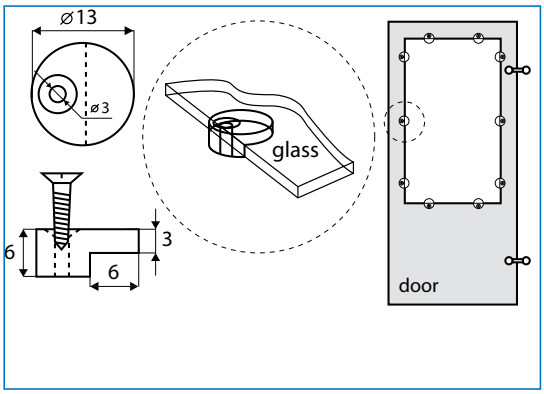

SHALLOW MIRROR CORNERS

Application
For mounting of mirrors

Material
Steel

Size: 22 x 22 mm

Item No.:
Nickel plated # 22.05.070
Brass plated # 22.05.071

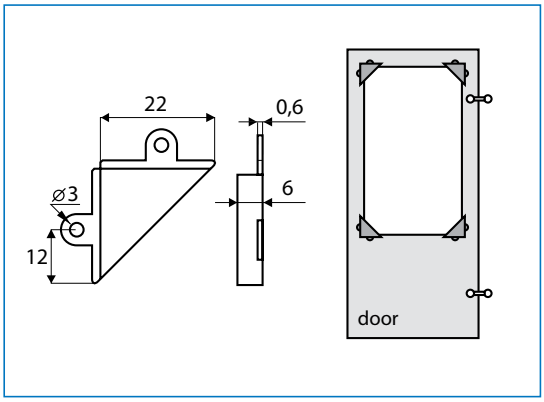

MIRROR CLIPS W/SPRING

Application
Fixing of mirrors. No drilling in glass required

Consists of
2 spring loaded top clips & 2 fixed bottom clips

Glass thickness
5 mm

Screw holes
ø5 mm

Finish
Steel, chrome plated # 22.05.100
Stainless steel 304 # 22.05.105

Packing
400 sets per carton

W/screws and wall plugs

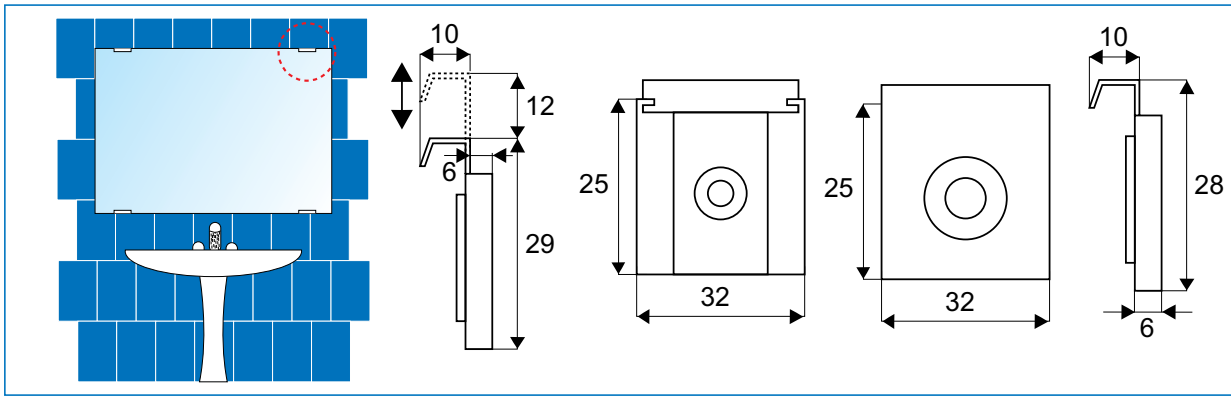

MIRROR SCREWS W/CAP

Application
Fixing of mirrors. Drilling in glass required

Consists of
Screw, rubber ring & cap

Material
Brass

ø4 x 19 mm screw. ø13 mm cap
Chrome plated # 22.05.140
SS-look # 22.05.141

ø4 x 25 mm screw. ø13 mm cap
Chrome plated # 22.05.145
SS-look # 22.05.146

ø4 x 30 mm screw. ø13 mm cap
Chrome plated # 22.05.150
SS-look # 22.05.151

ø4 x 34 mm screw. ø13 mm cap
Chrome plated # 22.05.155
SS-look # 22.05.156

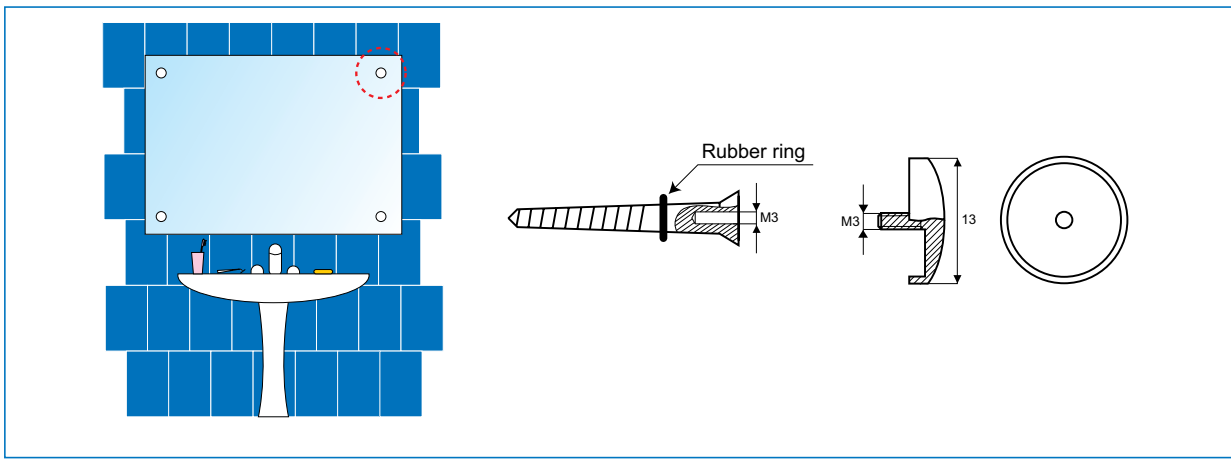

SIGNBOARD SCREWS „ALU“

Application
Mounting of signboards, mirrors etc.

Material
Aluminium

Mounting
ø 4 mm screw hole

ø 13 x 13 mm

Panel thickness:	**2 - 6 mm**
Anodized	# 22.11.110
Red	# 22.11.111
Blue	# 22.11.112
Gold	# 22.11.113
Black	# 22.11.114
Alu polished	# 22.11.115

ø 13 x 19 mm

Panel thickness:	**2 - 8 mm**
Anodized	# 22.11.120
Red	# 22.11.121
Blue	# 22.11.122
Gold	# 22.11.123
Black	# 22.11.124
Alu polished	# 22.11.125

ø 19 x 25 mm

Panel thickness:	**2 - 12 mm**
Anodized	# 22.11.130
Red	# 22.11.131
Blue	# 22.11.132
Gold	# 22.11.133
Black	# 22.11.134
Alu polished	# 22.11.135

ø 25 x 30 mm

Panel thickness:	**2 - 12 mm**
Anodized	# 22.11.140
Red	# 22.11.141
Blue	# 22.11.142
Gold	# 22.11.143
Black	# 22.11.144
Alu polished	# 22.11.145

All signboard screws are supplied w/2 transparent washers

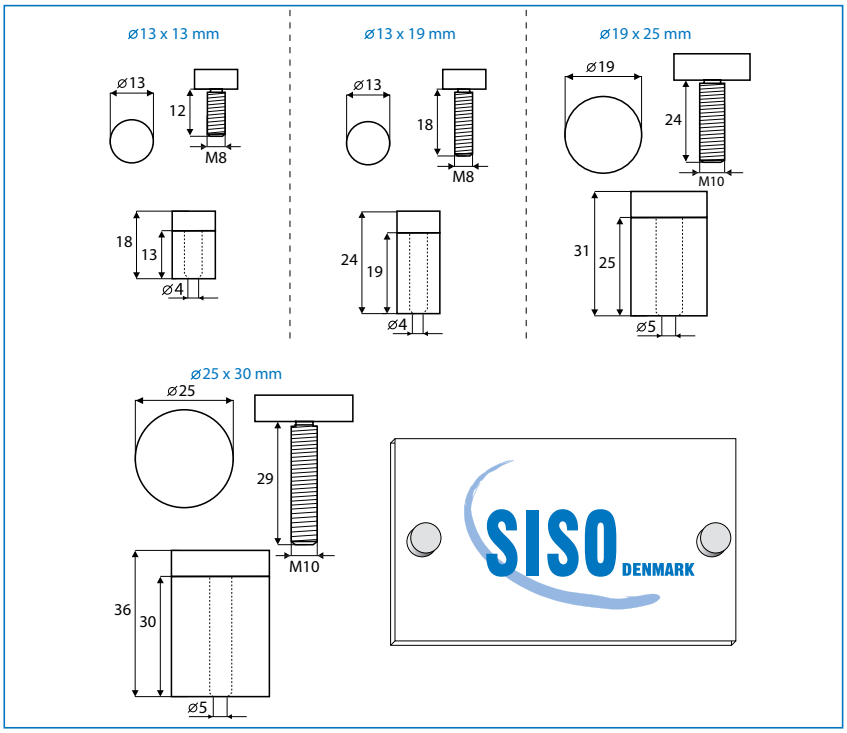

SIGNBOARD SCREW „SS“ W/CSK HEAD

Application
Mounting of signboards, mirrors etc.

Features
Counter sunk head with snake eyes

Material
Stainless steel 304

Mounting
8 x 14 mm screw hole

ø 20 x 28 mm

Panel thickness:	**8 - 12 mm**
SS 304	# 22.11.150

ø 32 x 28 mm

Panel thickness:	**8 - 12 mm**
SS 304	# 22.11.152

All signboard screws are supplied with black plastic washers

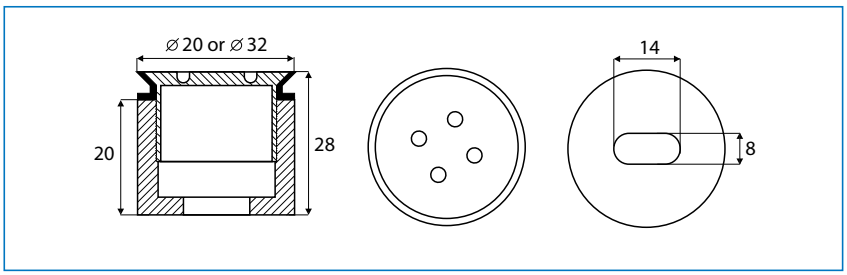

SIGNBOARD SCREWS

- high quality furniture fittings

Application
Mounting of signboards, mirrors etc.

Material
Brass

Mounting
ø4 mm screw hole

ø 13 x 19 mm

Panel thickness:	2 - 10 mm
Chrome plated	# 22.11.000
SS-look	# 22.11.001

ø 19 x 25 mm

Panel thickness:	2 - 15 mm
Chrome plated	# 22.11.050
SS-look	# 22.11.051

ø 25 x 25 mm

Panel thickness:	2 - 15 mm
Chrome plated	# 22.11.100
SS-look	# 22.11.101

All signboard screws are supplied w/2 transparent washers

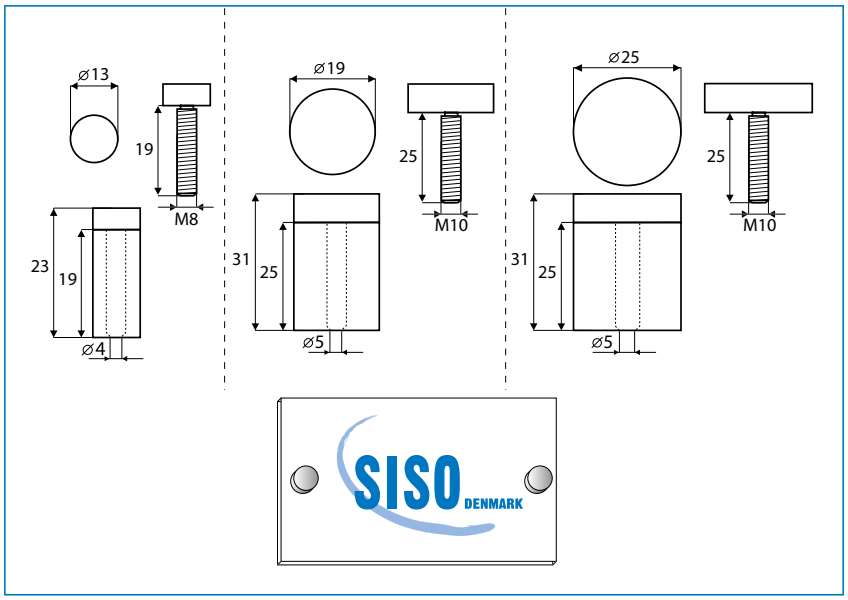

SIGNBOARD HOLDERS

Application
Mounting of signboards, mirrors etc.

Material
Brass

Mounting
ø4 mm screw hole

ø 25 x 20 mm

Panel thickness:	6 mm
Chrome plated	# 22.11.200
SS-look	# 22.11.201

ø 30 x 20 mm

Panel thickness:	6 mm
Chrome plated	# 22.11.210
SS-look	# 22.11.211

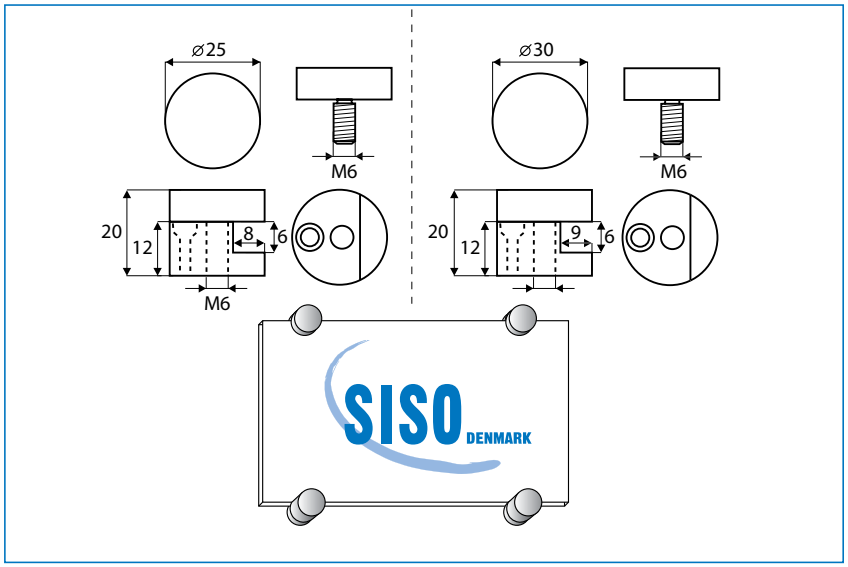

SUCTION PADS & BUMPERS

SUCTION PADS

For glass table tops

Material PVC

Colour Transparent

Packing 5000 pcs

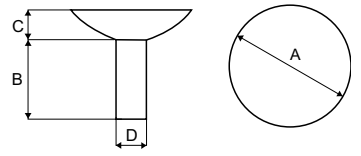

#	A	B	C	D
10.38.210	ø15 mm	10 mm	4 mm	ø6 mm
10.38.220	ø20 mm	9 mm	6 mm	ø6 mm

SUCTION PADS

For glass table tops

Material PVC

Colour Transparent

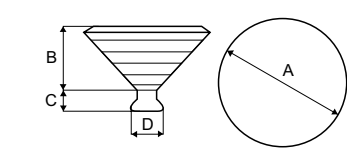

#	A	B	C	D
10.38.310	ø20 mm	10 mm	4 mm	ø6 mm
	ø25 mm	12 mm	5 mm	ø7 mm
10.38.312	ø30 mm	13 mm	5 mm	ø8 mm

BUMPER DISCS

Self adhesive Silencers

Material PVC, soft

Colour Transparent

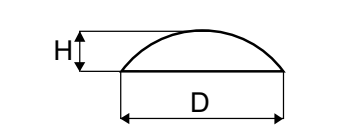

#	D	H	Box
10.39.010	ø7 mm	1.5 mm	2500 pcs
10.39.020	ø10 mm	1.5 mm	5000 pcs
10.39.030	ø10 mm	3 mm	5000 pcs
10.39.040	ø13 mm	4 mm	5000 pcs

TABLE LEG F/GLASS TABLE TOPS

Application
Table legs for glass table tops.
With adjustable glide.

Mounting
UV-Glue

Material
Steel, chrome plated legs
Stainless steel mounting plate
Black plastic adjuster

ø38 x 400 mm # 06.10.070
ø60 x 710 mm # 06.10.100

Packing
4 legs = 1 set

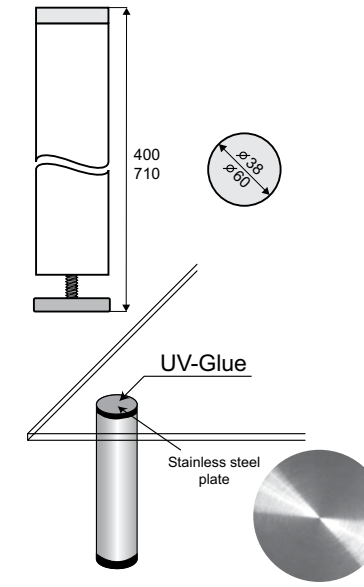

„The Post“

Shelving leg system.

Can be used for shelving, storage or display purposes. Office shelves, desk shelf, shop fittings, movable trade fair displays, entertainment centres.

Easy assembly and dis-assembly

Reconfigurable

Mounting clip for wood	Zamak Aluminium finish	# 22.30.000
Foot plug	Black plastic	# 22.30.001
Mounting plug clip	Black plastic	# 22.30.002
Mounting plate for glass	Stainless Steel	# 22.30.003
Aluminium bar of 2 meters	Aluminium anodized	# 22.30.004

Mounting instruction for glass tops
The stainless steel plate is first glued to the zamak mounting clip by use of BOHLE UV-Glue B 682-0 together with BOHLE UV-Activator B 953-0. UV-lamp is not needed.

After the 2 parts are glued together the stainless steel plate is glued to the glass plate by use of BOHLE UV-Glue B 682-0. UV-lamp is needed.

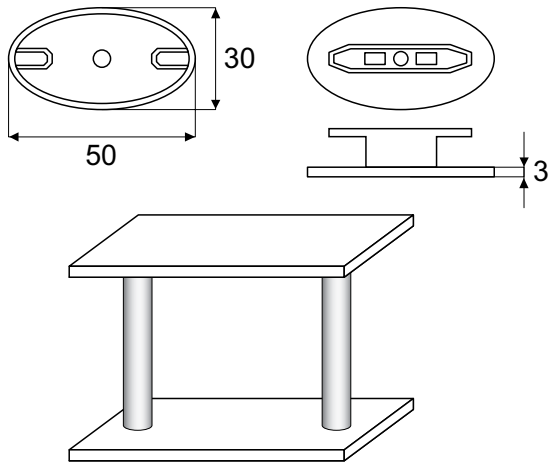

The Post - Connector detail

Kitchens

Extrusion illustration of **The Post**

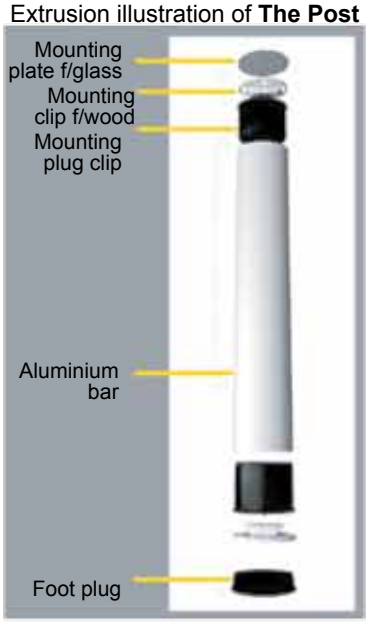

Assembly

1. Screw connectors into desk/bench and shelf and place posts on connectors

2. Place shelf on posts

3. Twist posts until it locks „click“, simply twist to unlock

The Post for glass

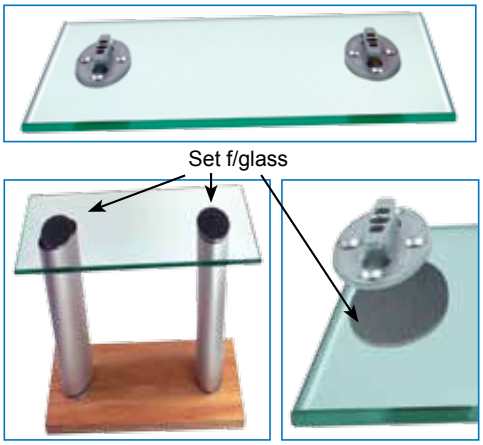

SAUNA HINGE F/GLASS DOORS W/MOUTING PLATE

Model „SLOVAKIA“

Opening: 180°.
Load capacity: 20 kg per hinge.
Glass thickness: 6-8 mm.
Max glass width: 1000 mm.

One hinge consists of:
1 zamak mounting plate 15 x 84 mm.
3 CSK screw holes ø 5 mm. c/c 70 mm.
1 zamak hinge body 60 x 55 mm.
1 stainless steel connecting pin.
2 plastic bushings.
1 stainless steel tightening screw M8 x 20 mm.
1 transparent height adjustment washer. Bore hole ø20 mm.
1 transparent protection ring. Bore hole ø 16 mm.
3 plastic cover caps.

Finish

Brown powder painted	# 15.25.050
Chrome plated	# 15.25.051
Aluminium look	# 15.25.052
Satin nickel plated	# 15.25.053
White powder painted	# 15.25.054

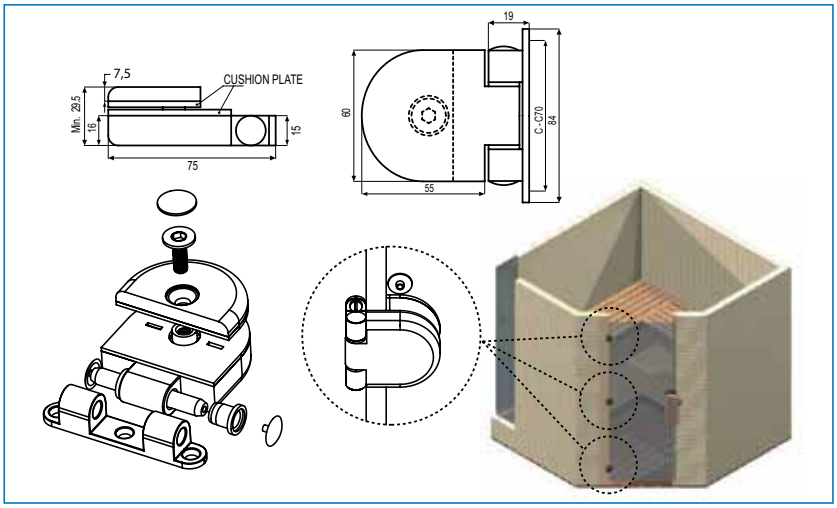

SAUNA HINGE F/GLASS DOORS - PIN MOUTING

Model „TREBISOV“

Opening: 180°.
Load capacity: 20 kg per hinge.
Glass thickness: 6-8 mm.
Max glass width: 1000 mm.

One hinge consists of:
2 steel cylinders ø15 mm w/ M8 x 40 mm pins for door frame mounting. c/c. 45 mm.
1 zamak hinge body 60 x 55 mm.
1 stainless steel connecting pin.
2 plastic bushings.
1 stainless steel tightening screw M8 x 20 mm.
1 transparent height adjustment washer. Bore hole ø 20 mm.
1 transparent protection ring. Bore hole ø 16 mm.
3 plastic cover caps.

Finish

Brown powder painted	# 15.25.000
Chrome plated	# 15.25.002
Aluminium look	# 15.25.001
Satin nickel plated	# 15.25.003
White powder painted	# 15.25.004

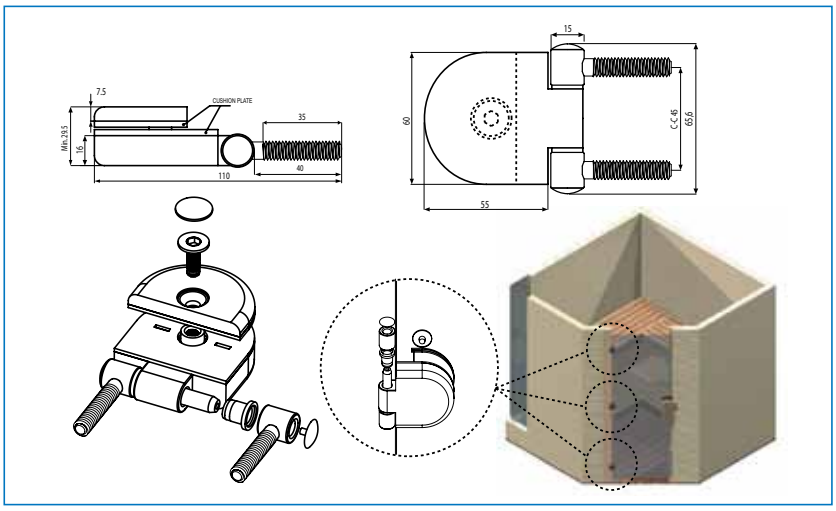

HEIGHT ADJUSTMENT WASHER INSTRUCTION

Transparent plastic height adjustment washer

1. Assembly with adjustment washer
Recommendation 1
Bore hole 20 mm

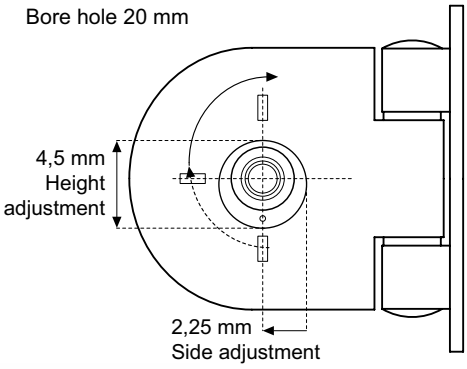

2. Assembly with adjustment washer
Recommendation 2
Bore hole 20 mm

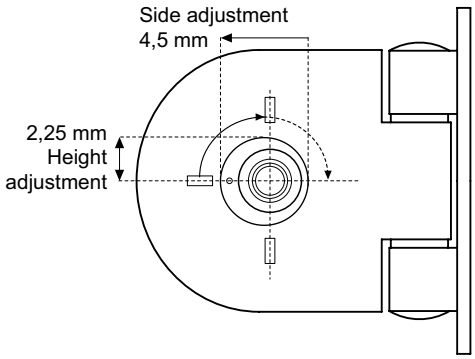

3. Assembly with protection ring
Bore hole 16 mm

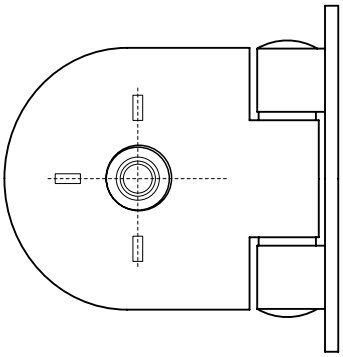

Transparent rubber protection ring

MOUNTNING INSTRUCTION F/GLASS DOOR HINGE MODEL SLOVAKIA & TREBISOV

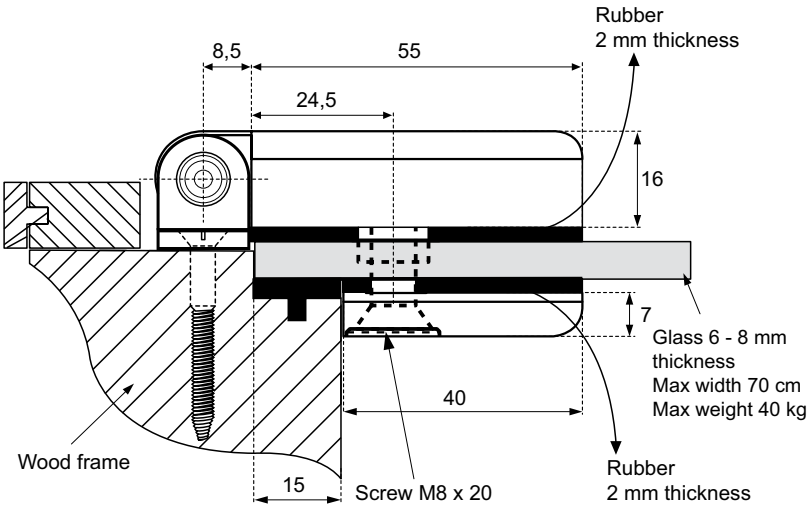

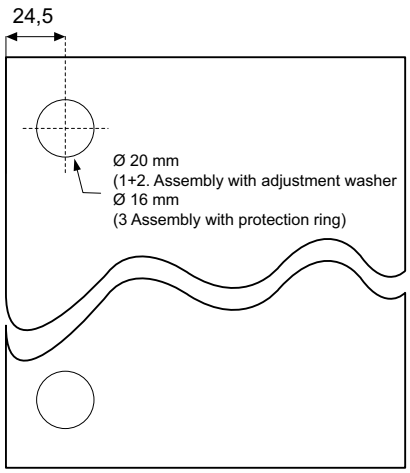

SAUNA HINGE F/WOODEN DOORS - PIN MOUTING

Model „BELARUS“

Opening: 180º.
Load capacity: 20 kg per hinge.

One hinge consists of
2 steel cylinders ø15 mm
w/ M8 x 40 mm pins for door frame mounting. c/c 44 mm.
1 steel cylinder ø15 mm
w/ M8 x 50 mm pin for door mounting.
1 stainless steel connecting pin.
2 plastic bushings.
2 plastic cover caps.
1 safety screw M4.

Colour
Brown powder painted # 15.25.080
(other colours on request)

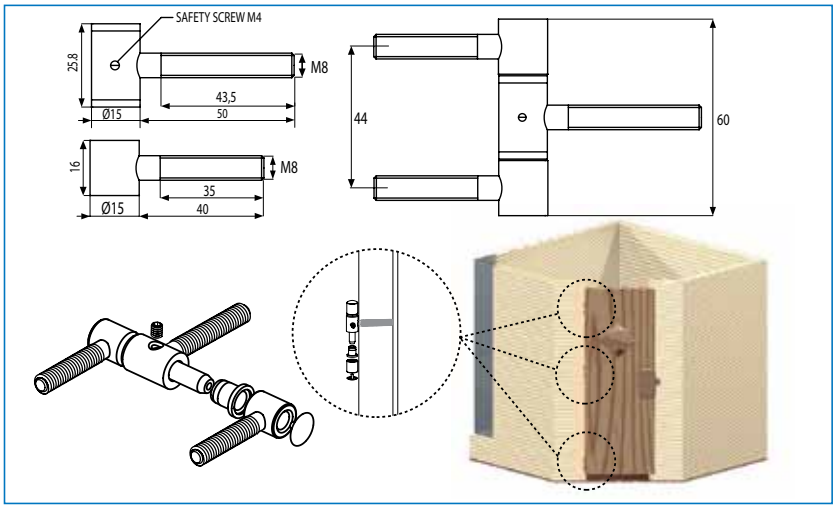

SAUNA HINGE F/WOODEN DOORS W/MOUTING PLATE

Model „ESTI“

Opening: 180º.
Load capacity: 20 kg per hinge.

One hinge consists of
1 zamak mounting plate 15 x 84 mm.
3 CSK screw holes ø 5 mm. c/c 70 mm.
1 steel cylinder ø15 mm w/ M8 x 50 mm pin for door mounting.
1 stainless steel connecting pin.
2 plastic bushings.
2 plastic cover caps.
1 safety screw M4.

Colour
Brown powder painted # 15.25.070
(other colours on request)

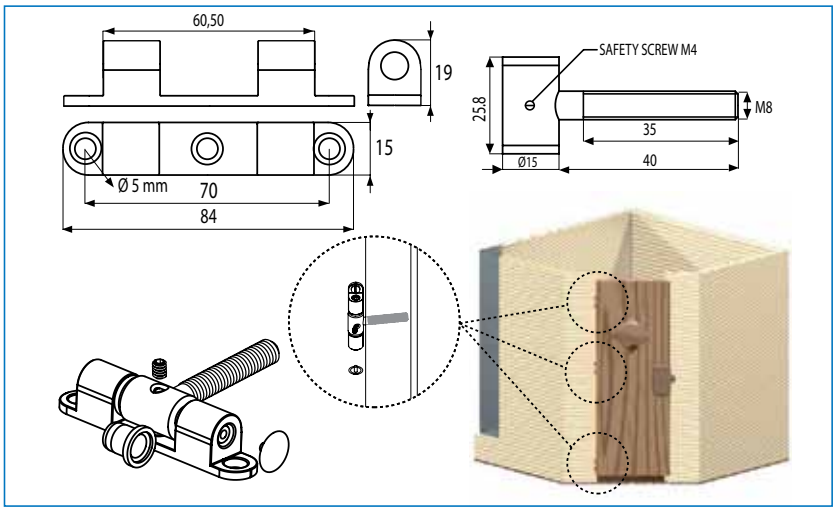

SAUNA HINGE F/GLASS DOORS - CRANKED

Model „SUOMI“

Opening: 130°.
Load capacity: 20 kg per hinge.
Glass thickness: 6-8 mm.
Max glass width: 1000 mm.
2 bore holes ø 12 mm for extra safety.
40 mm distance from centre of bore hole to edge of glass door.

One hinge consists of
1 zamak mounting plate 25 x 50 mm. w/3 CSK screw holes ø 5 mm. c/c 32mm.
1 zamak hinge body 49,5 x 49,5 mm.
1 stainless steel connecting pin.
2 plastic bushings.
1 safety screw M4.
2 stainless steel tightening screws M8 x 12 mm c/c 25 mm.

Item No.

Brown powder painted	# 15.25.060
Chrome plated	# 15.25.061
Aluminium finish	# 15.25.062
Satin nickel plated	# 15.25.063
White powder painted	# 15.25.064

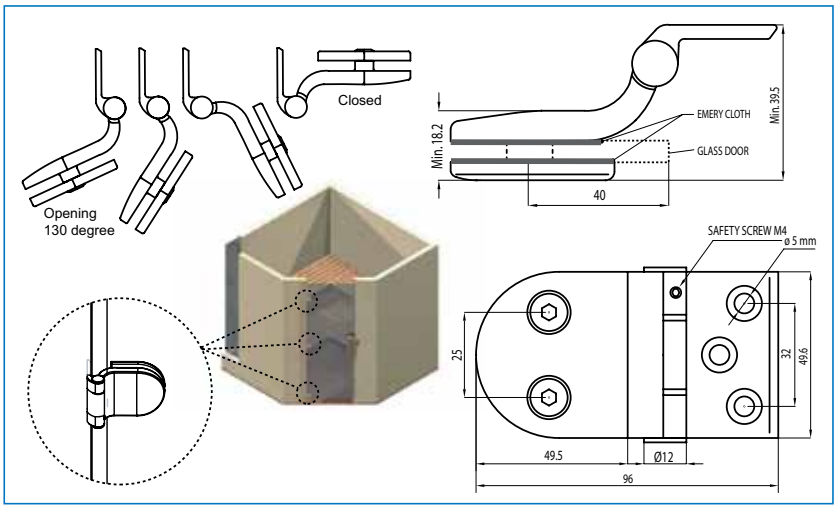

SAUNA DOOR CATCH

Model „UKRAINE“

Size
85 x 41 mm

Material
Zamak house & stainless steel spring

Pulling power
13 -15 kg.

Colour
Brown powder painted
(other colours on request)

Item No.

Brown powder painted	# 15.25.020
Chrome plated	# 15.25.021
Aluminium finish	# 15.25.022
Satin nickel plated	# 15.25.023
White powder painted	# 15.25.024

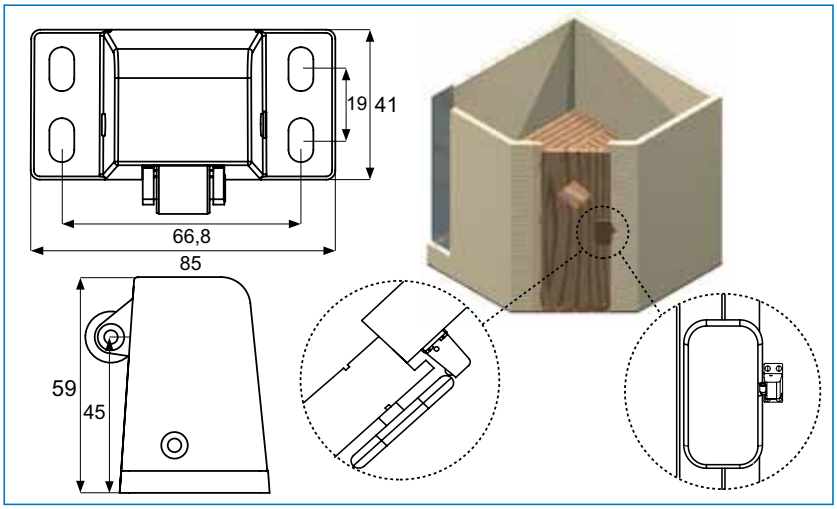

SAUNA DOOR CATCH ROLLER W/STRENGHT ADJUSTMENT FUNCTION

Model „DANIA“

Application
For sauna doors

Mounting
Inset hole 29 x 36 mm c.c. 48 mm

Material
Zamak housing & plastic roller

Function
By turning in the screw the depth of the roller can be adjusted from 0 - 7,5 mm

Item No.

Brown	# 15.25.031
Chrome plated	# 15.25.030

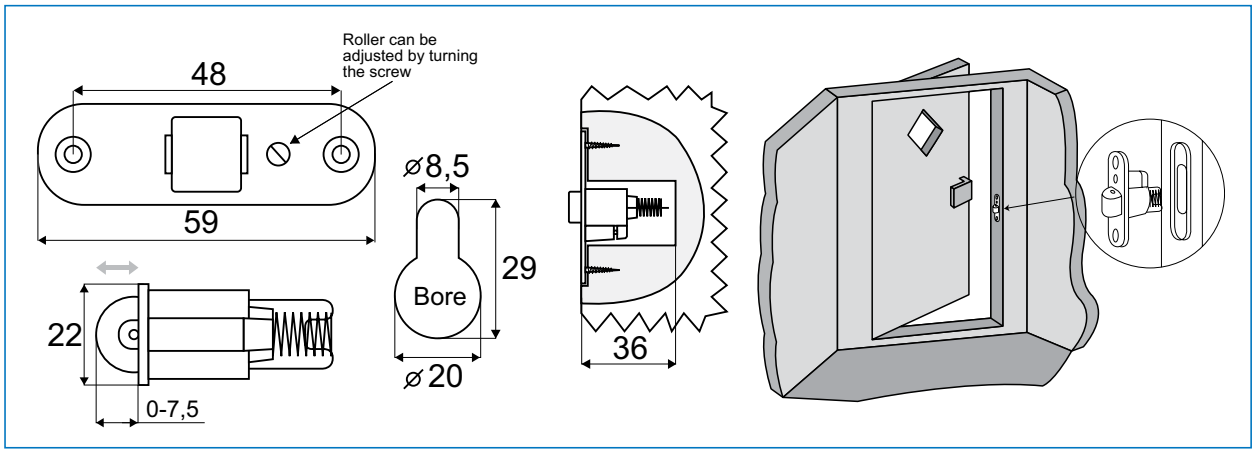

MAGNET SCREW WITH 14 MM HEX HEAD

MAGNET SCREW WITH 14 MM HEX HEAD

Size	M6 x 22 mm
Material	Steel
Finish	Nickel plated
Pulling power	9,5 kg
Item No.	#15.25.010

CATCH PLATE:

Size	35 x 27 mm.
Material	Steel

Finish
W/1 mm cushion for 8 mm glass thickness:

Aluminium look	# 15.25.013
Nickel plated	# 15.25.015
Chrome plated	# 15.25.017

Finish
W/2 mm cushion for 6 mm glass thickness:

Aluminium look	# 15.25.014
Nickel plated	# 15.25.016
Chrome plated	# 15.25.018

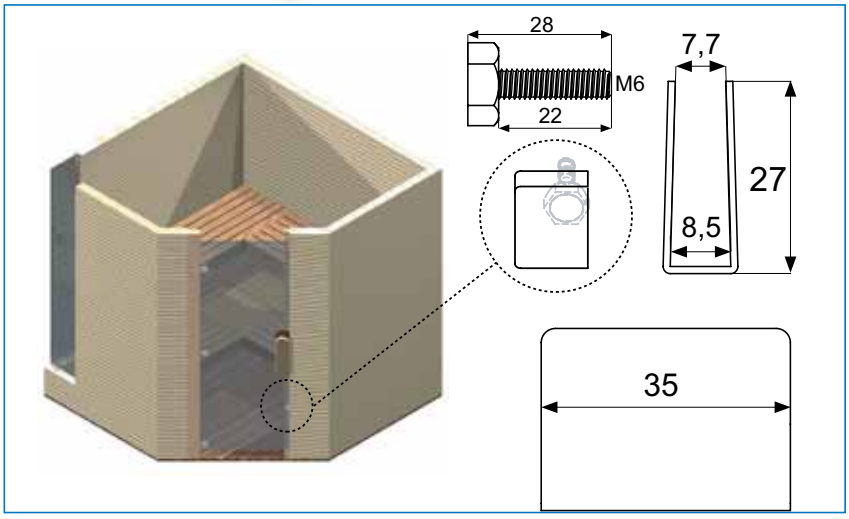

SHOWER DOOR HINGE „TEX“

Application
Suitable for glass door/shower doors
Drilling/cutting required
W/angle adjustment function
W/25º return function (self-centering)
Opening: 90º
Max glass width: 800 mm
Load capacity: 18 kg per hinge
Glass thickness: 6-10 mm
Material
Brass
1 hinge consists of
1 hinge 90 x 55 mm
1 mounting plate 4 x 90 x 50 mm
2 hex screws 4 mm
1 L-shaped 4 mm hex key
2 transparent cushions 1 mm thickness
2 transparent cushions 1,5 mm thickness
2 screws w/2,5 mm hex
1 L-shaped hex key 2,5 mm
4 wall plugs
4 wall screws
1 drilling/cutting template
Finish

SS-look	# 15.24.000
Chrome plated	# 15.24.002
Alu-finish	# 15.24.001

Packing
20 pcs per carton

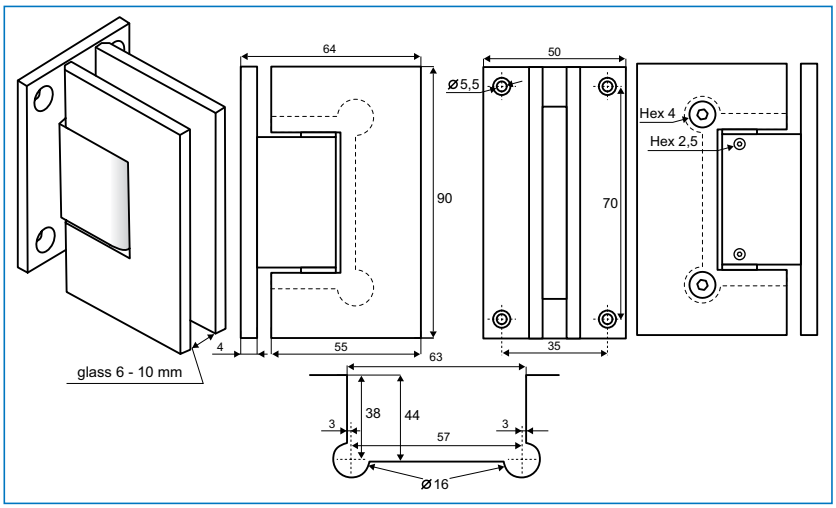

SHOWER DOOR HINGE „TEX“ W/OFF CENTRE MOUNTING PLATE

Application
Suitable for glass door/shower doors
Drilling/cutting required
W/angle adjustment function
W/25º return function (self-centering)
Opening: 90º
Max glass width: 800 mm
Load capacity: 18 kg per hinge
Glass thickness: 6-10 mm
Material
Brass
1 hinge consists of
1 hinge 90 x 55 mm
1 mounting plate 4 x 90 x 50 mm
2 hex screws 4 mm
1 L-shaped 4 mm hex key
2 transparent cushions 1 mm thickness
2 transparent cushions 1,5 mm thickness
2 screws w/2,5 mm hex
1 L-shaped hex key 2,5 mm
3 wall plugs
3 wall screws
1 drilling/cutting template
Finish

SS-look	# 15.24.010
Alu-finish	# 15.24.011
Chrome plated	# 15.24.012

Packing
20 pcs per carton

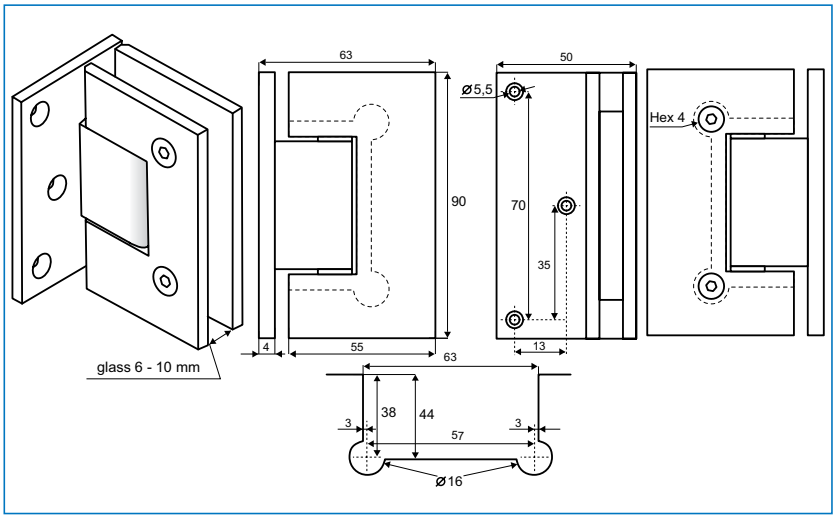

SHOWER DOOR HINGE „TEX“
GLASS TO GLASS 180º

Application
Suitable for glass door/shower doors
Drilling/cutting required
W/angle adjustment function
W/25º return function (self-centering)
Opening: 180º
Max glass width: 800 mm
Load capacity: 18 kg per hinge
Glass thickness: 6 - 10 mm

Material
Brass

1 hinge consists of
1 hinge 90 x 55 mm
1 glass wall fixing plate 90 x 55 mm
4 hex screws 4 mm
1 L-shaped 4 mm hex key
4 transparent cushions 1 mm thickness
4 transparent cushions 1,5 mm thickness
2 screws w/2,5 mm hex
1 L-shaped hex key 2,5 mm
1 drilling/cutting template

Finish

SS-look	# 15.24.005
Alu-finish	# 15.24.006
Chrome plated	# 15.24.007

Packing
10 pcs per carton

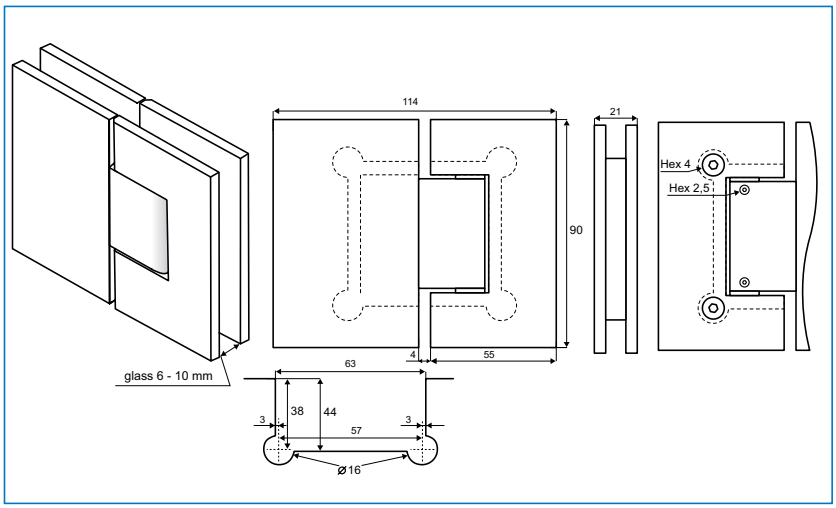

SHOWER DOOR HINGE „CPH“

Application
Suitable for glass door/shower doors
Drilling/cutting required
W/angle adjustment function
W/25º return function (self-centering)

Opening: 90º
Max glass width: 800 mm
Load capacity: 18 kg per hinge
Glass thickness: 6-10 mm

Material
Brass

1 hinge consists of
1 hinge 90 x 55 mm
1 mounting plate 4 x 90 x 50 mm
2 hex screws 4 mm
1 L-shaped 4 mm hex key
2 transparent cushions 1 mm thickness
4 transparent cushions 1,5 mm thickness
2 screws w/2,5 mm hex
1 L-shaped hex key 2,5 mm
4 wall plugs & 4 wall screws
1 drilling/cutting template

Finish

SS-look	# 15.23.811
Chrome plated	# 15.23.810
Alu-finish	# 15.23.812

Packing
20 pcs per carton

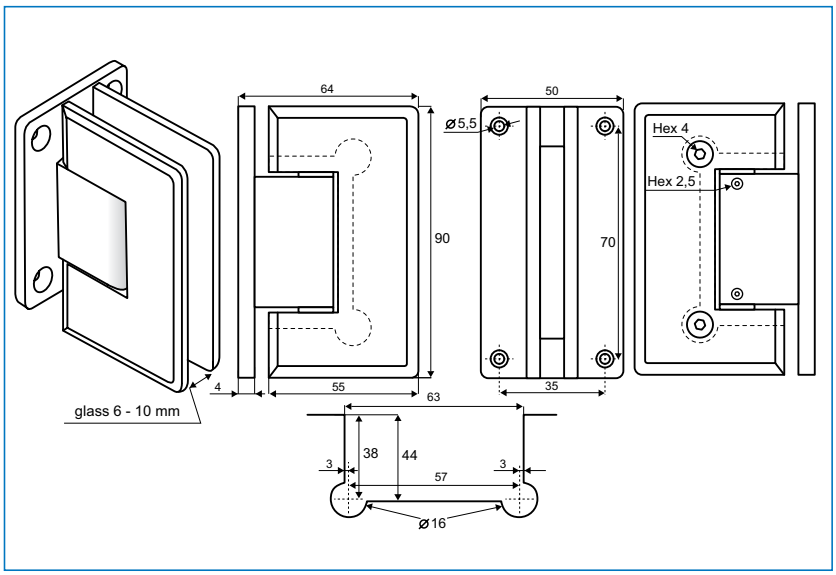

SHOWER DOOR HINGE „CPH“
W/OFF CENTRE MOUNTING PLATE

- high quality furniture fittings

Application
Suitable for glass door/shower doors
Drilling/cutting required
W/angle adjustment function
W/25° return function (self-centering)
Opening: 90°
Max glass width: 800 mm
Load capacity: 18 kg per hinge
Glass thickness: 6-10 mm
Material
Brass
1 hinge consists of
1 hinge 90 x 55 mm
1 mounting plate 4 x 90 x 50 mm
2 hex screws 4 mm
1 L-shaped 4 mm hex key
2 transparent cushions 1 mm thickness
4 transparent cushions 1,5 mm thickness
2 screws w/2,5 mm hex
1 L-shaped hex key 2,5 mm
3 wall plugs & 3 wall screws
1 drilling/cutting template
Finish

SS-look	# 15.23.815
Chrome plated	# 15.23.814
Alu-finish	# 15.23.816

Packing
20 pcs per carton

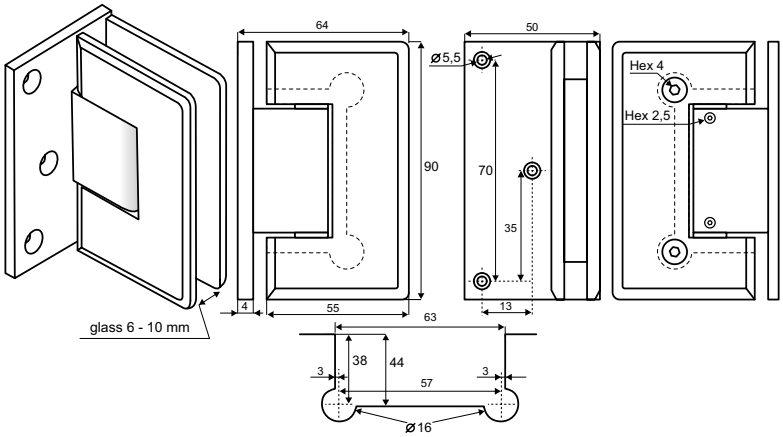

SHOWER DOOR HINGE „CPH“
GLASS TO GLASS 180°

Application
Suitable for glass door/shower doors
Drilling/cutting required
W/angle adjustment function
W/25° return function (self-centering)

Opening: 180°
Max glass width: 800 mm
Load capacity: 18 kg per hinge
Glass thickness: 6-10 mm

Material
Brass

1 hinge consists of
1 hinge 90 x 55 mm
1 glass wall fixing plate 90 x 55 mm
4 hex screws 4 mm
1 L-shaped 4 mm hex key
2 transparent cushions 1 mm thickness
4 transparent cushions 1,5 mm thickness
2 screws w/2,5 mm hex
1 L-shaped hex key 2,5 mm
1 drilling/cutting template

Finish

SS-look	# 15.23.820
Chrome plated	# 15.23.818
Alu-finish	# 15.23.819

Packing
10 pcs per carton

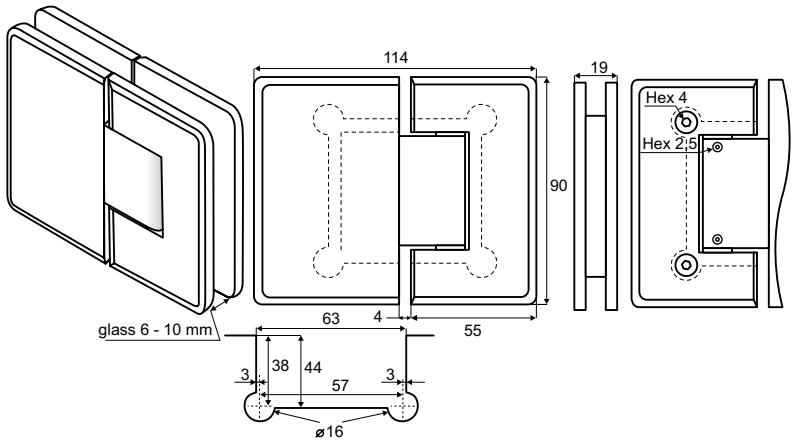

SHOWER DOOR HINGE „CPH“
GLASS TO GLASS 90°

Application
Suitable for glass doors/shower doors
Drilling/cutting required
W/angle adjustment function
W/25° return function (self-centering)

Opening: 90°
Max glass width: 800 mm
Load capacity: 18 kg per hinge
Glass thickness: 6-10 mm

Material
Brass

1 hinge consists of
1 hinge 90 x 55 mm
1 glass wall fixing plate 90 x 55 mm
4 hex screws 4 mm
1 L-shaped 4 mm hex key
2 transparent cushions 1 mm thickness
2 transparent cushions 1,5 mm thickness
2 screws w/2,5 mm hex
1 L-shaped 2,5 mm hex key
1 drilling/cutting template

Finish

Chrome plated	# 15.23.821
SS-look	# 15.23.822
Alu-finish	# 15.23.823

Packing
20 pcs per carton

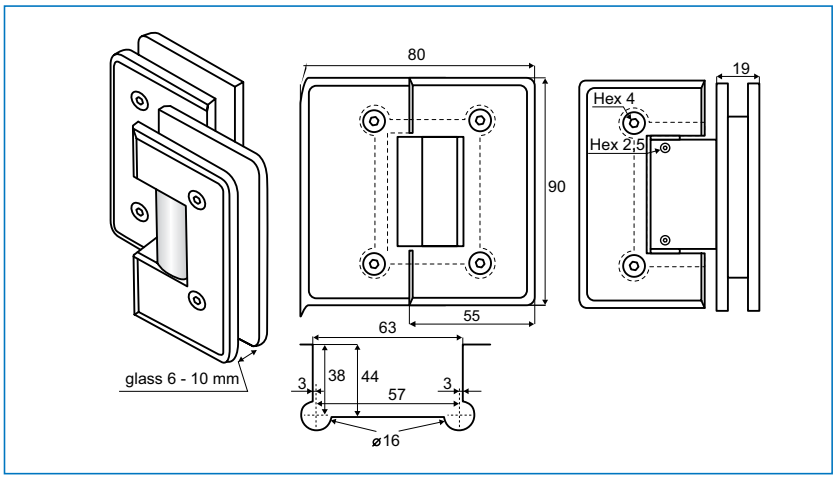

SHOWER DOOR HINGE „CPH“
GLASS TO GLASS 135°

Application
Suitable for glass doors/shower doors
Drilling/cutting required
W/angle adjustment function
W/25° return function (self-centering)

Opening: 135°
Max glass width: 800 mm
Load capacity: 18 kg per hinge
Glass thickness: 6 - 10 mm

Material
Brass

1 hinge consists of
1 hinge 90 x 55 mm
1 glass wall fixing plate 90 x 55 mm
4 hex screws 4 mm
1 L-shaped 4 mm hex key
2 transparent cushions 1 mm thickness
2 transparent cushions 1,5 mm thickness
2 screws w/2,5 mm hex
1 L-shaped 2,5 mm hex key
1 drilling/cutting template

Finish

Chrome plated	# 15.23.807
SS-look	# 15.23.808
Alu-finish	# 15.23.809

Packing
10 pcs per carton

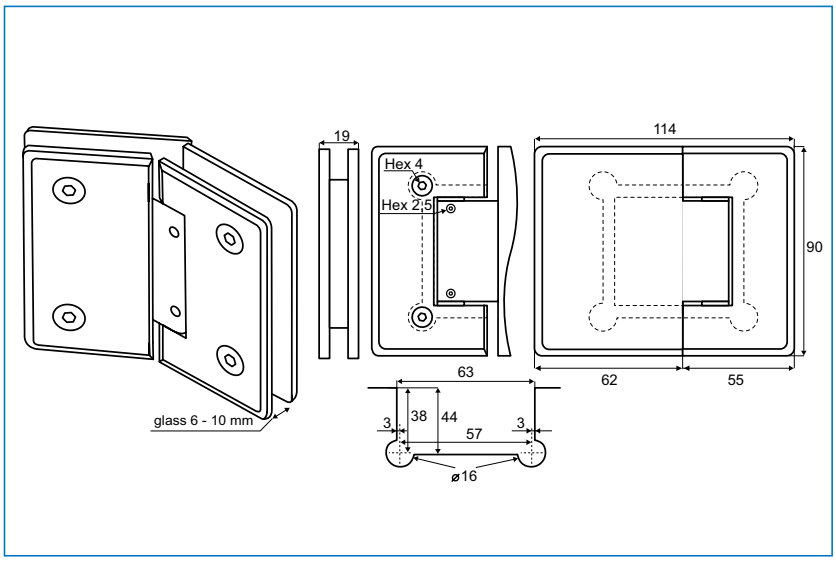

SHOWER DOOR HINGE „JUN“
W/OFF CENTRE MOUNTING PLATE

- high quality furniture fittings

Application
Suitable for glass door
Drilling/cutting required
W/15° return function
Opening: 90°
Load capacity: 12 kg per hinge
Glass thickness: 6-8 mm
Material: Brass
1 hinge consists of
1 hinge 75 x 46 mm
1 mounting plated 75 x 43 x 3 mm (H/W/T)
2 transparent cushions 1 mm thickness
2 transparent cushions 1,5 mm thickness
1 L-shaped hex key 4 mm
3 wall plugs
3 wall screws
Finish:
Chrome plated # 15.24.205
Packing:
20 pcs per carton

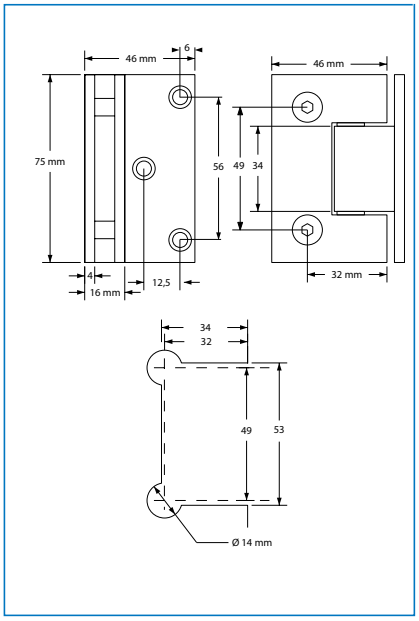

SHOWER DOOR HINGE „JUN“
GLASS TO GLASS 180°

Application
Suitable for glass door
Drilling/cutting required
W/15° return function
Opening: 180°
Load capacity: 14 kg per hinge
Glass thickness: 6-8 mm
Material: Brass
1 hinge consists of
1 hinge 75 x 45 mm
4 transparent cushions 1 mm thickness
4 transparent cushions 1,5 mm thickness
1 L-shaped hex key 4 mm
Finish:
Chrome plated # 15.24.210
Packing:
20 pcs per carton

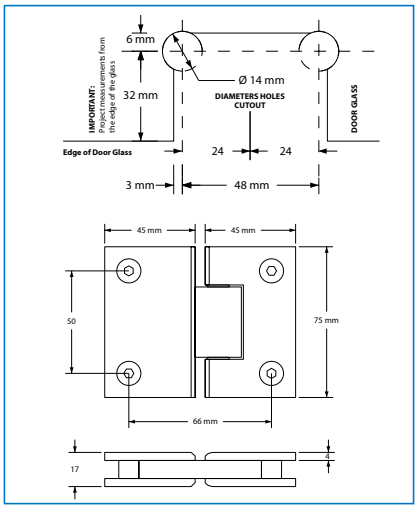

SHOWER DOOR HINGE „JUN“
GLASS TO GLASS 135°

Application
Suitable for glass door
Drilling/cutting required
W/15° return function
Opening: 135°
Load capacity: 14 kg per hinge
Glass thickness: 6-8 mm
Material: Brass
1 hinge consists of
1 hinge 75 x 45 mm & 75 x 37 mm
4 transparent cushions 1 mm thickness
4 transparent cushions 1,5 mm thickness
1 L-shaped hex key 4 mm
Finish:
Chrome plated # 15.24.215
Packing:
20 pcs per carton

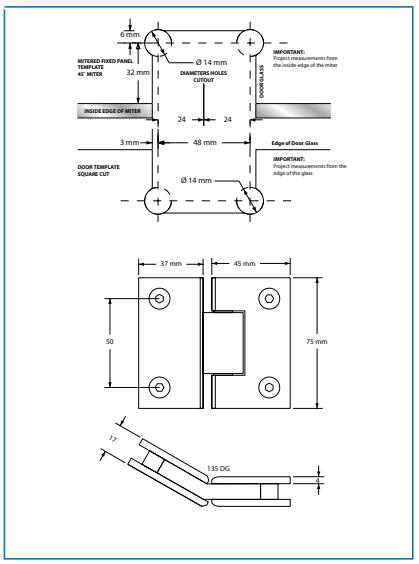

SHOWER DOOR HINGE „LINZ“ W/OFF CENTRE MOUNTING PLATE

Application
Suitable for glass door/shower doors
Drilling/cutting required
W/angle adjustment function
W/25º return function (self-centering)

Opening: 90º
Max glass width: 800 mm
Load capacity: 18 kg per hinge
Glass thickness: 6-10 mm

Material
Brass

1 hinge consists of
1 hinge 55 x 112 mm
1 mounting plate 33 x 55 mm
2 fixing screws 4 mm hex
1 L-shaped 4 mm hex key
2 transparent cushions 1 mm thickness
2 transparent cushions 1,5 mm thickness
1 angle adjustment screws w/3 mm hex
1 L-shaped hex key 3 mm
3 wall plugs & 3 wall screws
1 drilling/cutting template

Finish

SS-look	# 15.23.845
Chrome plated	# 15.23.844
Alu-finish	# 15.23.846

Packing
20 pcs per carton

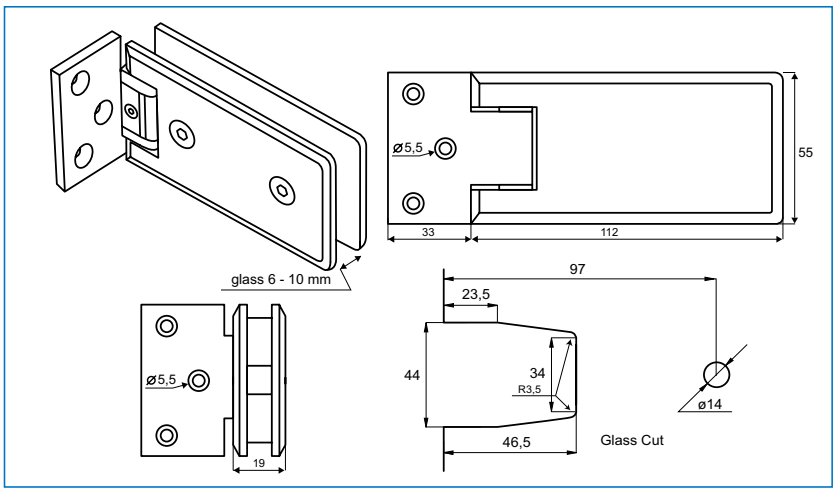

SHOWER DOOR HINGE „LINZ“ W/CENTRE MOUNTING PLATE

Application
Suitable for glass door/shower doors
Drilling/cutting required
W/angle adjustment function
W/25º return function (self-centering)

Opening: 90º
Max glass width: 800 mm
Load capacity: 18 kg per hinge
Glass thickness: 6-10 mm

Material
Brass

1 hinge consists of
1 hinge 55 x 112 mm
1 mounting plate 61 x 55 mm
2 fixing screws 4 mm hex
1 L-shaped 4 mm hex key
2 transparent cushions 1 mm thickness
2 transparent cushions 1,5 mm thickness
1 angle adjustment screws w/3 mm hex
1 L-shaped hex key 3 mm
3 wall plugs & 3 wall screws
1 drilling/cutting template

Finish

SS-look	# 15.23.841
Chrome plated	# 15.23.840
Alu-finish	# 15.23.842

Packing
20 pcs per carton

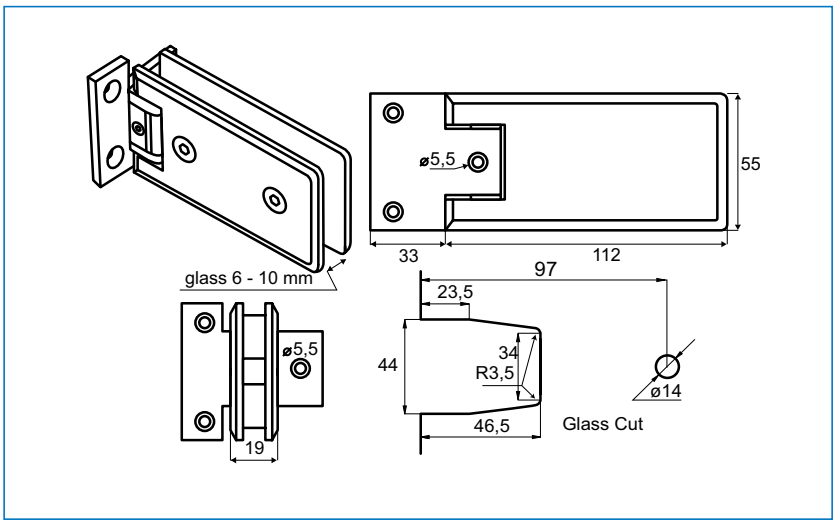

SHOWER DOOR HINGE „LINZ“ GLASS TO GLASS 135°

- high quality furniture fittings

Application
Suitable for glass doors/shower doors
Drilling/cutting required
W/angle adjustment function
W/25° return function (self-centering)

Opening: 135°
Max glass width: 800 mm
Load capacity: 18 kg per hinge
Glass thickness: 6 - 10 mm

Material
Brass

1 hinge consists of
1 hinge 55 x 112 mm
1 glass wall fixing plate 55 x 112 mm
4 hex screws 4 mm
1 L-shaped 4 mm hex key
2 transparent cushions 1 mm thickness
2 transparent cushions 1,5 mm thickness
1 angle adjustment screw w/3mm hex
1 L-shaped 3 mm hex key
1 drilling/cutting template

Finish

Chrome plated	# 15.23.850
SS-look	# 15.23.851
Alu-finish	# 15.23.852

Packing
10 pcs per carton

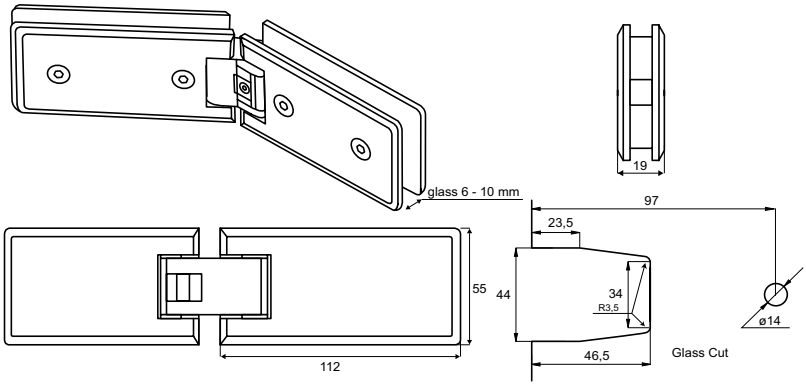

SHOWER DOOR HINGE „LINZ“ GLASS TO GLASS 180°

Application
Suitable for glass doors/shower doors
Drilling/cutting required
W/angle adjustment function
W/25° return function (self-centering)

Opening: 180°
Max glass width: 800 mm
Load capacity: 18 kg per hinge
Glass thickness: 6 - 10 mm

Material
Brass

1 hinge consists of
1 hinge 55 x 112 mm
1 glass wall fixing plate 55 x 112 mm
4 hex screws 4 mm
1 L-shaped 4 mm hex key
2 transparent cushions 1 mm thickness
2 transparent cushions 1,5 mm thickness
1 angle adjustment screw w/3mm hex
1 L-shaped 3 mm hex key
1 drilling/cutting template

Finish

Chrome plated	# 15.23.847
SS-look	# 15.23.848
Alu-finish	# 15.23.849

Packing
10 pcs per carton

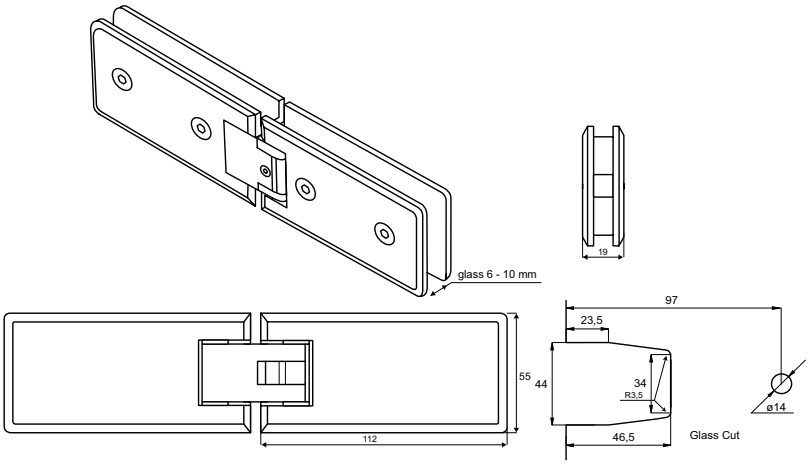

SHOWER DOOR HINGE „LINZ“ GLASS TO GLASS 270°

Application
Suitable for glass doors/shower doors
Drilling/cutting required
W/overlap
W/25º return function (self-centering)

Opening: 270º
Max glass width: 800 mm
Load capacity: 18 kg per hinge
Glass thickness: 6 - 10 mm

Material
Brass

1 hinge consists of
1 hinge 55 x 112 mm
1 glass wall fixing plate 55 x 112 mm
4 hex screws 4 mm
1 L-shaped 4 mm hex key
2 transparent cushions 1 mm thickness
2 transparent cushions 1,5 mm thickness
1 angle adjustment screw w/3mm hex
1 L-shaped 3 mm hex key
1 drilling/cutting template

Finish

Chrome plated	# 15.23.855
SS-look	# 15.23.856
Alu-finish	# 15.23.857

Packing
10 pcs per carton

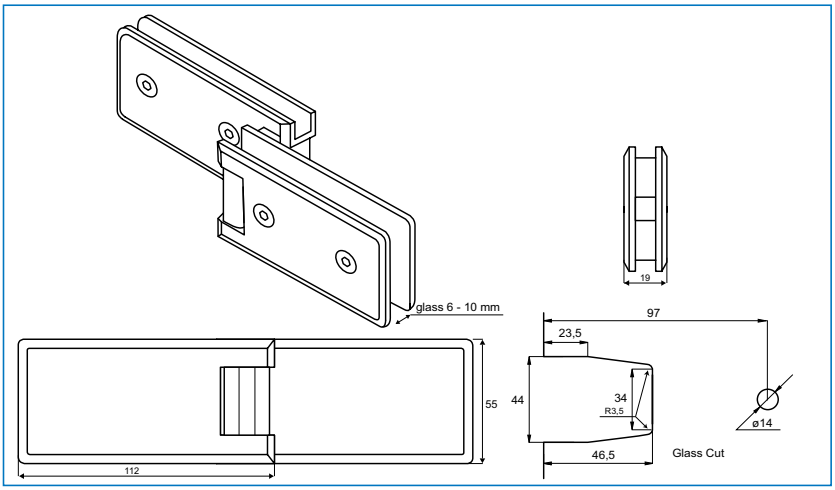

SHOWER DOOR HINGE „KING“W/OFF CENTRE MOUNTING PLATE

Application
Suitable for glass doors/shower doors
Drilling/cutting required
W/angle adjustment function
W/25º return function (self-centering)

Opening: 90º
Max glass width: 800 mm
Load capacity: 18 kg per hinge
Glass thickness: 6 - 10 mm

Material
Brass

1 hinge consists of
1 hinge 55 x 112 mm
1 mounting plate 19 x 55 mm
2 fixing screws 4 mm hex
1 L-shaped 4 mm hex key
2 transparent cushions 1 mm thickness
2 transparent cushions 1,5 mm thickness
1 angle adjustment screw w/3 mm hex
1 L-shaped 3 mm hex key
2 wall plugs & 2 wall screws
1 drilling/cutting template

Finish

Chrome plated	# 15.24.130
SS-look	# 15.24.131

Packing
20 pcs per carton

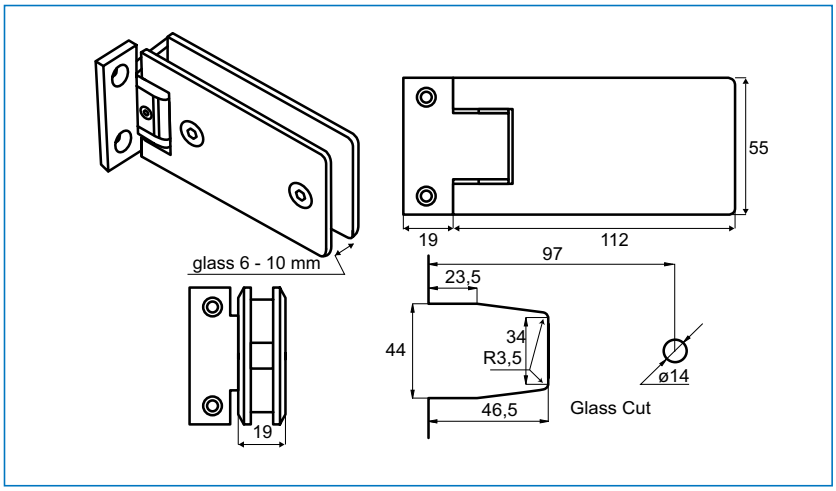

SHOWER DOOR HINGE „KING“ GLASS TO GLASS 135°

- high quality furniture fittings

Application
Suitable for glass doors/shower doors
Drilling/cutting required
W/angle adjustment function
W/25º return function (self-centering)

Opening: 135º
Max glass width: 800 mm
Load capacity: 18 kg per hinge
Glass thickness: 6 - 10 mm

Material
Brass

1 hinge consists of
1 hinge 55 x 112 mm
1 glass wall fixing plate 55 x 112 mm
4 hex screws 4 mm
1 L-shaped 4 mm hex key
2 transparent cushions 1 mm thickness
2 transparent cushions 1,5 mm thickness
1 angle adjustment screw w/3mm hex
1 L-shaped 3 mm hex key
1 drilling/cutting template

Finish

Chrome plated	# 15.24.140
SS-look	# 15.24.141

Packing
10 pcs per carton

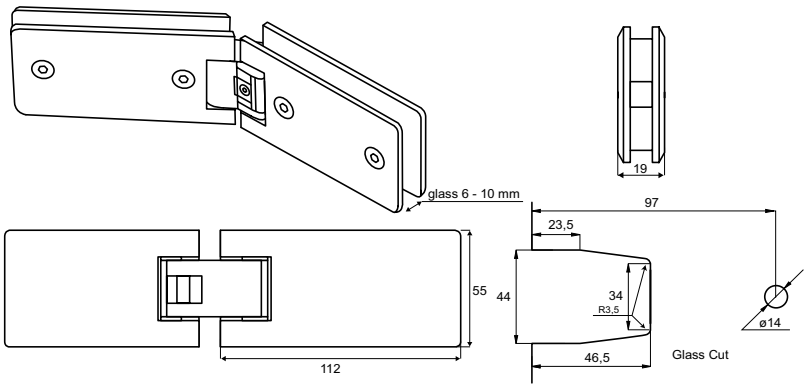

SHOWER DOOR HINGE „KING“ GLASS TO GLASS 180°

Application
Suitable for glass doors/shower doors
Drilling/cutting required
W/angle adjustment function
W/25º return function (self-centering)

Opening: 180º
Max glass width: 800 mm
Load capacity: 18 kg per hinge
Glass thickness: 6 - 10 mm

Material
Brass

1 hinge consists of
1 hinge 55 x 112 mm
1 glass wall fixing plate 55 x 112 mm
4 hex screws 4 mm
1 L-shaped 4 mm hex key
2 transparent cushions 1 mm thickness
2 transparent cushions 1,5 mm thickness
1 angle adjustment screw w/3mm hex
1 L-shaped 3 mm hex key
1 drilling/cutting template

Finish

Chrome plated	# 15.24.135
SS-look	# 15.24.136

Packing
10 pcs per carton

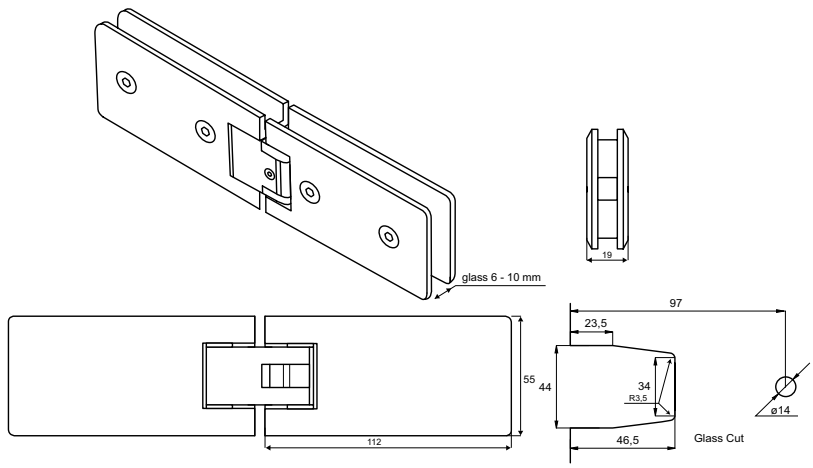

SHOWER DOOR HINGE „ZUG“ W/OFF CENTRE MOUNTING PLATE

Application
Suitable for glass door/shower doors
Drilling/cutting required
W/angle adjustment function
W/25° return function (self-centering)

Opening: 90°
Max glass width: 800 mm
Load capacity: 18 kg per hinge
Glass thickness: 6-10 mm

Material
Brass

1 hinge consists of
1 hinge 55 x 80 mm
1 mounting plate 33 x 55 mm
2 fixing screws 4 mm hex
1 L-shaped 4 mm hex key
2 transparent cushions 1 mm thickness
2 transparent cushions 1,5 mm thickness
1 angle adjustment screws w/3 mm hex
1 L-shaped hex key 3 mm
3 wall plugs & 3 wall screws
1 drilling/cutting template

Finish
Chrome plated # 15.23.010

Packing
20 pcs per carton

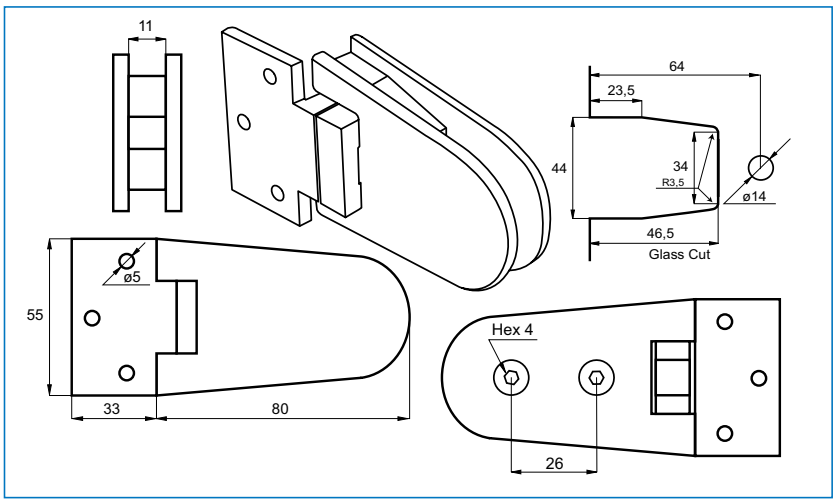

KLINGERSIL GASKETS FOR SHOWER DOOR HINGES - EASY MOUNTING

Application
To be used as gaskets for shower hinges.

Function
Anti-stick finish on both sides which makes mounting & adjustment of hinges easy.
Excellent resistance to low pressure steam & water
Excellent color resistance

Material
Aramid & glass fibres
with a nitrile rubber binder.
Meets non-asbestors
standard BS7531 Grade Y
Green/black color

Model LINZ & KING

Size:	102 x 57 mm
1 mm	# 15.22.411
1,5 mm	# 15.22.412

Model CPH & TEX

Size:	88 x 53 mm
1 mm	# 15.22.413
1,5 mm	# 15.22.414

Model ZUG

Size:	77 x 50 mm
1 mm	# 15.22.415
2 mm	# 15.22.416

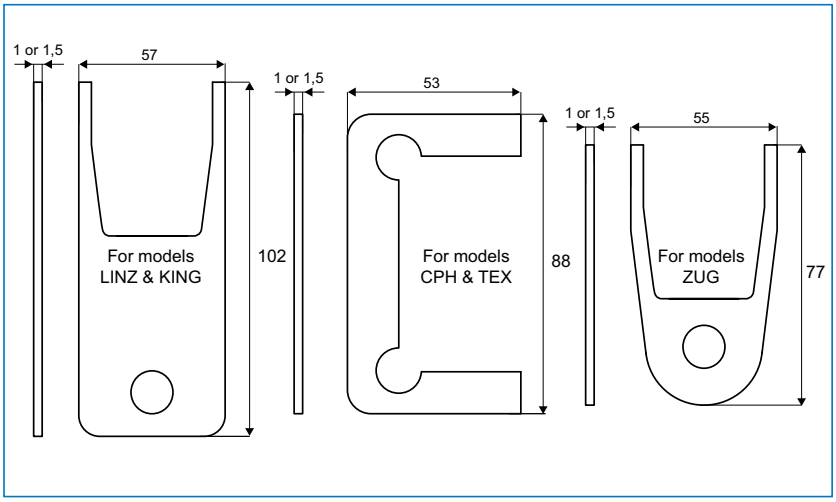

SHOWER PIVOT HINGE FLOOR/GLASS „LODZ“

- high quality furniture fittings

Application
Suitable for glass door/shower doors
Top or bottom mounting,
drilling/cutting required
W/15º return function (self-centering)

Opening: 180º
Max glass width: 800 mm
Load capacity: 20 kg per hinge
Glass thickness: 8-10 mm

Material
Brass

1 hinge consists of
1 hinge 50 x 92 x 21 mm (H/W/D)
2 hex screws 4 mm
1 L-shaped 4 mm hex key
2 transparent cushions 1 mm thickness
2 transparent cushions 1,5 mm thickness
2 wall plugs
2 wall screws
1 drilling/cutting template

Finish

SS-look	# 15.23.900
Alu-finish	# 15.23.901
Chrome plated	# 15.23.902

Packing
10 pcs per carton

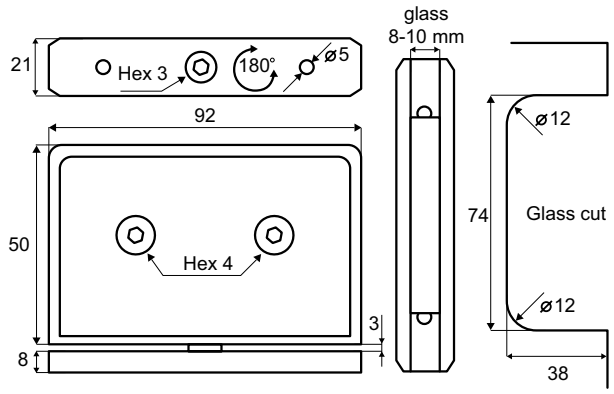

SHOWER PIVOT HINGE GLASS/GLASS „LODZ“

Application
Suitable for glass door/shower doors
Drilling/cutting required
W/15º return function (self-centering)

Features
Opening: 180º
Max glass width: 800 mm
Load capacity: 20 kg per hinge
Glass thickness: 8 - 10 mm

Material
Brass

1 hinge consists of
1 hinge 50 x 92 x 21 mm (H/W/D)
4 hex screws 4 mm
1 L-shaped 4 mm hex key
4 transparent cushions 1 mm thickness
4 transparent cushions 1,5 mm thickness
1 drilling/cutting template

Finish

SS-look	# 15.23.905
Alu-finish	# 15.23.906
Chrome plated	# 15.23.907

Packing
10 pcs per carton

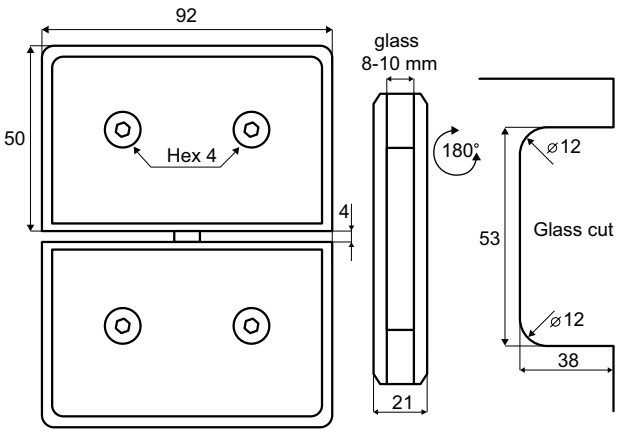

GLASS CLAMP GLASS/GLASS 180° W/SQUARE CORNERS „BERN“

Application
Suitable for shower glass walls
Drilling required

Features
Glass thickness: 8 - 10 mm

Mounting
Glass ø12 mm drilling

Material
Brass

1 clamp consists of
1 clamp 103 x 51 x 17 mm (H/W/D)
2 fixing PZD screws
4 transparent cushions 1 mm thickness
2 transparent tubes ø12 x 8 mm

Finish

Chrome plated	# 15.23.695
SS-look	# 15.23.696
Alu-finish	# 15.23.697

Packing
50 pcs per carton

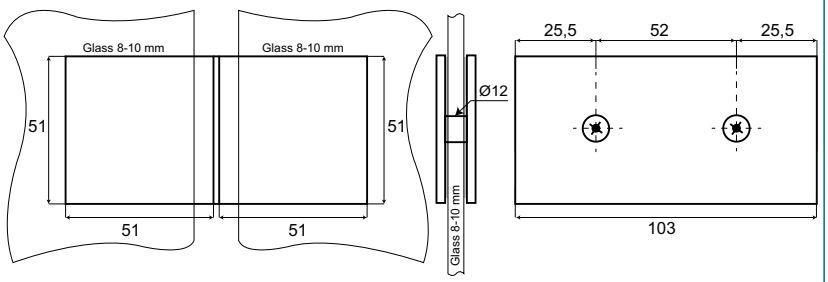

GLASS CLAMP GLASS/GLASS 90° W/SQUARE CORNERS „BERN“

Application
Suitable for shower glass walls
Drilling required

Features
Glass thickness: 8 - 10 mm

Mounting
Glass ø12 mm drilling

Material
Brass

1 clamp consists of
1 clamp 51 x 51 x 17 mm (H/W/D)
2 fixing PZD screws
4 transparent cushions 1 mm thickness
2 transparent tubes ø12 x 8 mm

Finish

Chrome plated	# 15.23.690
SS-look	# 15.23.691
Alu-finish	# 15.23.692

Packing
20 pcs per carton

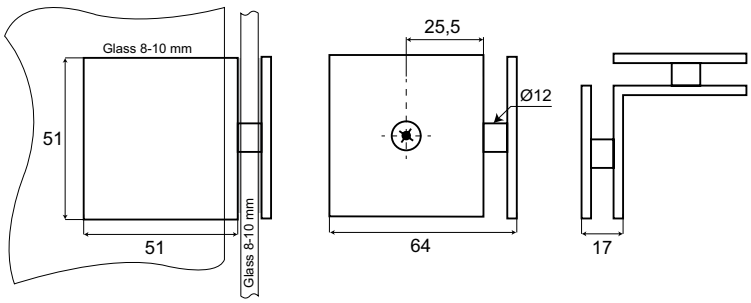

GLASS CLAMP WALL/GLASS 180°
W/SQUARE CORNERS „BERN“

Application
Suitable for shower glass walls
Drilling required

Features
Glass thickness 8 - 10 mm

Mounting
Wall 2 x ø5 mm CSK screw holes
Glass ø12 mm drilling

Material
Brass

1 clamp consists of
1 clamp 51 x 51 x 17 mm (H/W/D)
1 fixing PZD screws
2 transparent cushions 1 mm thickness
1 transparent tube ø12 x 8 mm
2 wall plugs
2 wall screws

Finish

Chrome plated	# 15.23.706
SS-look	# 15.23.705
Alu-finish	# 15.23.704

Packing
60 pcs per carton

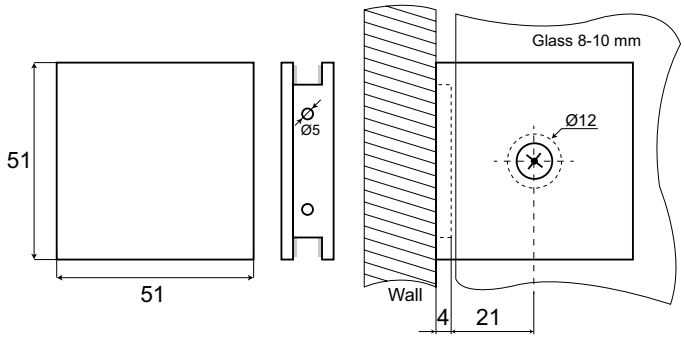

GLASS CLAMP WALL/GLASS 90°
W/SQUARE CORNERS „BERN“

Application
Suitable for shower glass walls
Drilling required

Features
Glass thickness 8 - 10 mm

Mounting
Wall: 1 x ø5 mm CSK screw holes
Glass: ø12 mm drilling

Material
Brass

1 clamp consists of
1 clamp 51 x 51 x 17 mm (H/W/D)
1 fixing PZD screws
2 transparent cushions 1 mm thickness
1 transparent tube ø12 x 8 mm
1 wall plug
1 wall screw

Finish

Chrome plated	# 15.23.700
SS-look	# 15.23.701
Alu-finish	# 15.23.702

Packing
20 pcs per carton

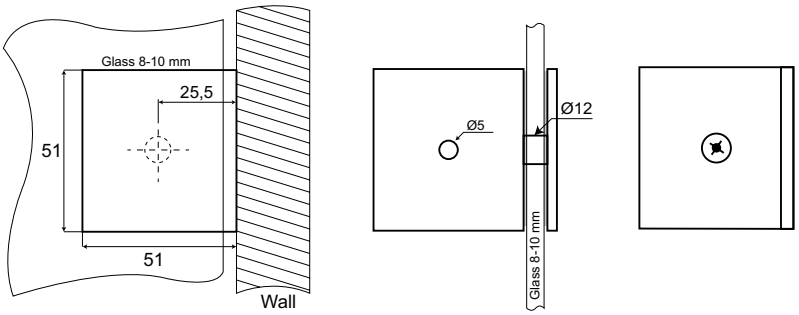

GLASS CLAMP WALL/GLASS 180° W/CHAMFERED EDGES „LUND“

Application
Suitable for shower glass walls
Drilling required

Features
Glass thickness 8 - 10 mm

Mounting
Wall: 1 x ø5 mm CSK screw holes
Glass: ø12 mm drilling

Material
Brass

1 clamp consists of
1 clamp 51 x 51 x 17 mm (H/W/D)
1 fixing PZD screws
2 transparent cushions 1 mm thickness
1 transparent tube ø12 x 8 mm
1 wall plug
1 wall screw

Finish

Chrome plated	# 15.23.707
SS-look	# 15.23.708
Alu-finish	# 15.23.709

Packing
60 pcs per carton

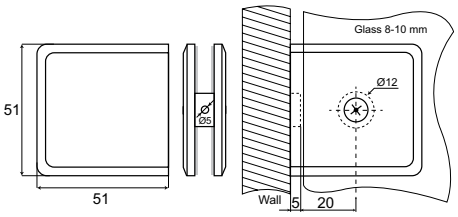

GLASS CLAMP WALL/GLASS 90° W/CHAMFERED EDGES „LUND“

Application
Suitable for shower glass walls
Drilling required

Features
Glass thickness 8 - 10 mm

Mounting
Wall: 1 x ø5 mm CSK screw holes
Glass: ø12 mm drilling

Material
Brass

1 clamp consists of
1 clamp 51 x 51 x 17 mm (H/W/D)
1 fixing PZD screws
2 transparent cushions 1 mm thickness
1 transparent tube ø12 x 8 mm
1 wall plug
1 wall screw

Finish

Chrome plated	# 15.23.710
SS-look	# 15.23.711
Alu-finish	# 15.23.712

Packing
20 pcs per carton

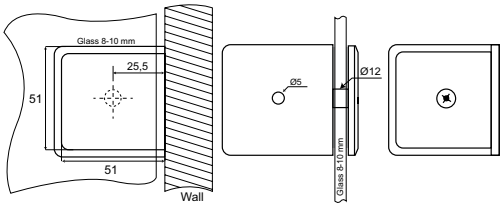

GLASS GLAMP WALL/GLASS 90° W/ROUNDED CORNERS „HAM“

Application
Suitable for shower glass walls
Drilling required

Features
Glass thickness 8-10 mm
90° angle

Mouting
Wall: 1 x ø5 mm CSK screw holes
Glass: ø12 mm drilling

Material
Brass

1 clamp consists of
1 clamp 44 x 44 x 18 (H/W/D)
1 fixing PZD screws
4 transparent cushions 1 mm thickness
1 wall plug
1 wall screw
1 transparent tube ø12 X 8 mm

Finish

Chrome plated	# 15.23.750

Packing
40 pcs per carton

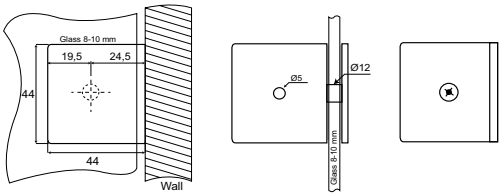

GLASS CLAMP WALL/GLASS 180° W/ROUNDED CORNERS "HAM"

- high quality furniture fittings

Application
Suitable for shower glass walls
Drilling required

Features
Glass thickness 8 - 10 mm

Material
Brass

1 clamp consists of
1 clamp 40 x 40 x 17 mm (H/W/D)
1 fixing PZD screws
2 transparent cushions 1 mm thickness
1 transparent tube ø 12 x 8 mm
1 wall plug
1 wall screw

Finish:

Chrome plated	# 15.23.721
SS-look	# 15.23.722

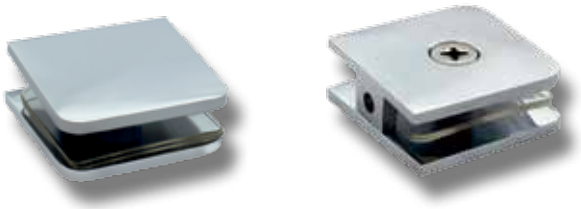

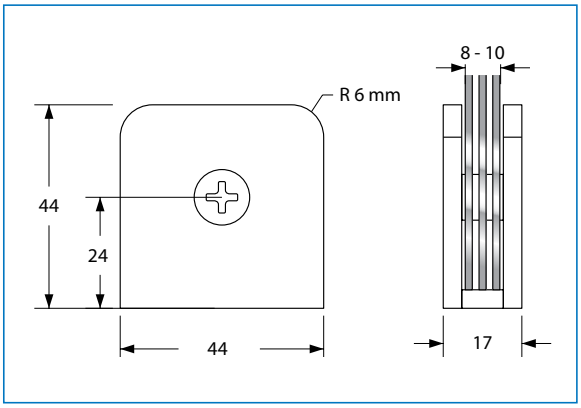

SHOWER HINGE "UP/DOWN" FOR GLASS/GLASS

Application
Suitable for shower doors
Drilling required

Features
Left or right hand version
W/self closing function

Opening: 180 degree but with stop at 90 DG
Max glass width: 800 mm
Glass thickness: 6 - 8 mm
Load capacity: 20 kg

Material
Brass

1 hinge consists of
1 hinge 70 x 92 mm (H/W)
4 fixing screws 4 mm hex
1 L-shaped hex key 4 mm
1 L-shaped hex key 2 mm

Finish:

Left hand - Chrome plated	# 15.23.100
Left hand - SS-look	# 15.23.101
Left hand - Alu finish	# 15.23.102
Right hand - Chrome plated	# 15.23.105
Right hand - SS-look	# 15.23.106
Right hand - Alu finish	# 15.23.107

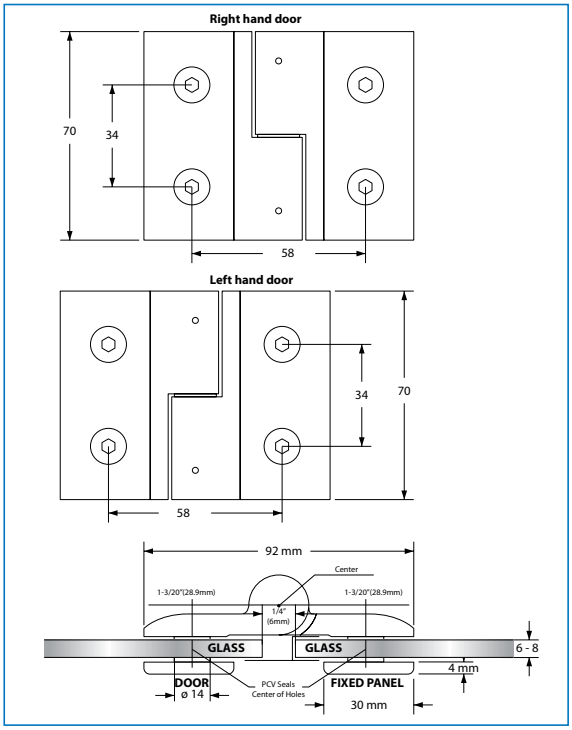

ALUMINIUM LIFT HINGE

Application
Suitable for shower doors
w/lift-up function

Opening 110º
Max glass size 1900 x 800 mm
Load capacity 23 kg
Glass thickness 6 mm

Material
Aluminium

Models	Finish	Item No.
1,5 meters	anodized	# 15.23.005
1,5 meters	chrome pl.	# 15.23.006
1,5 meters	white paint.	# 15.23.007
1,9 meters	anodized	# 15.23.000
1,9 meters	chrome pl.	# 15.23.001
1,9 meters	white paint.	# 15.23.002

Packing
1 complete assembled set per carton

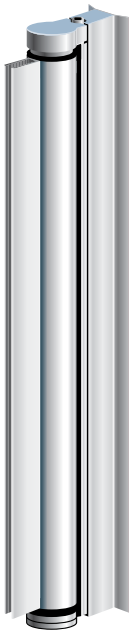

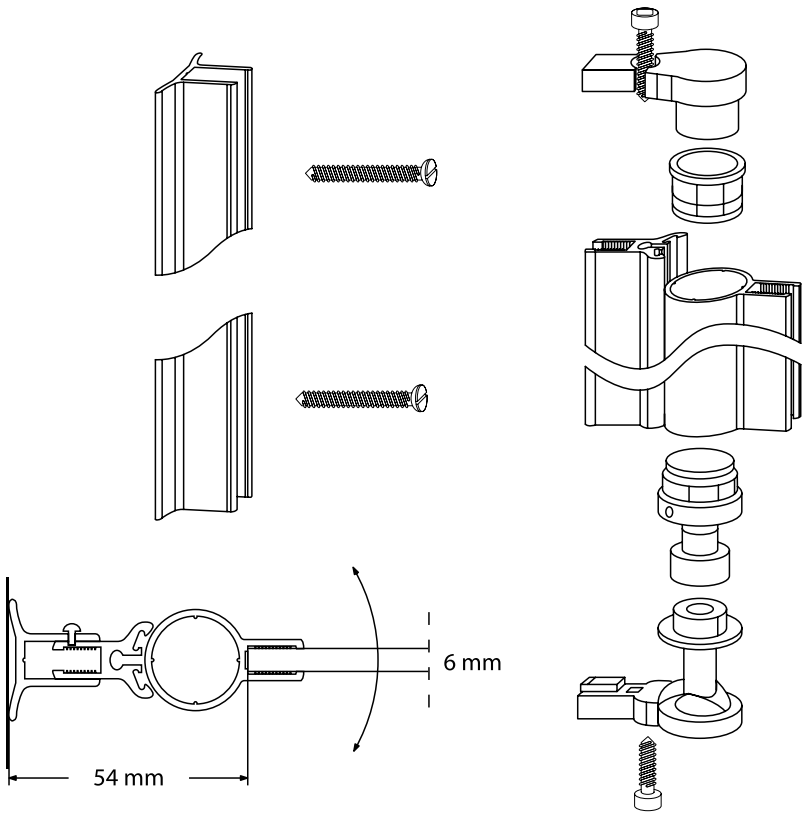

SHOWER SUPPORT BAR
SOLID BRASS - GLASS TO GLASS

- high quality furniture fittings

SISO DENMARK

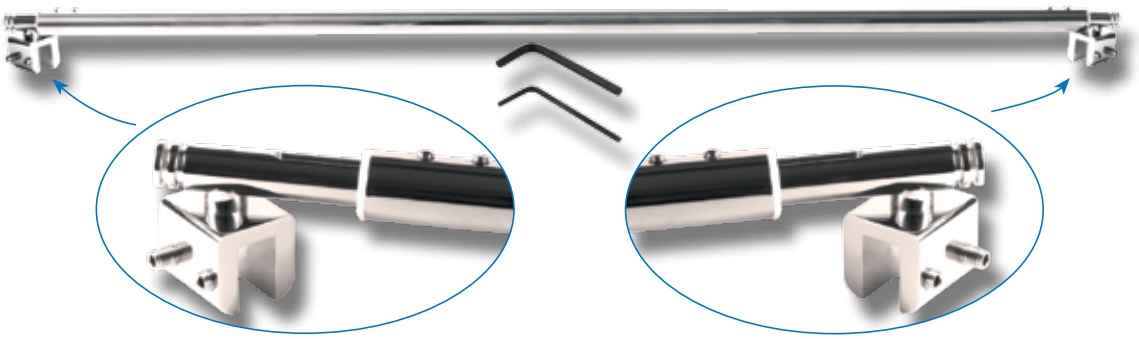

Application

Suitable for connecting glass to wall.
No glass drilling required.
Extendable from 1050 - 1350 mm
Glass thickness 8 - 10 mm

Material

Brass

1 support bar consists of:

1 bar ø19 x 1050 to 1350 mm
w/2 tightening screws 2,5 mm hex
1 L-shaped hex key 2,5 mm
2 glass mounting bracket 30 X 26 mm
w/2 tightening screws 3 mm hex
1 L-shaped hex key 3 mm
4 transparent cushions 1 mm thickness

Finish

Chrome plated # 15.24.021

Packing

10 pcs per cartoon

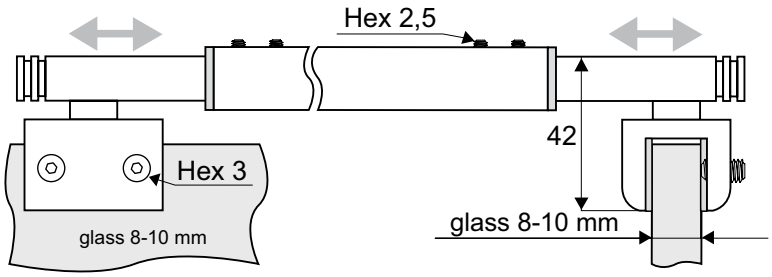

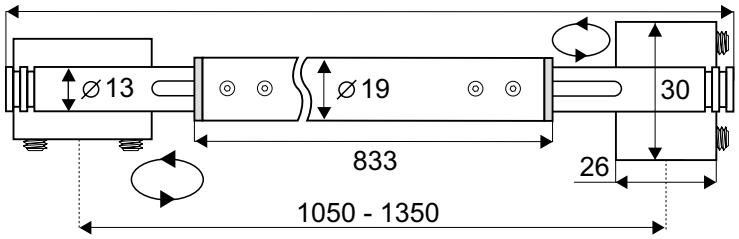

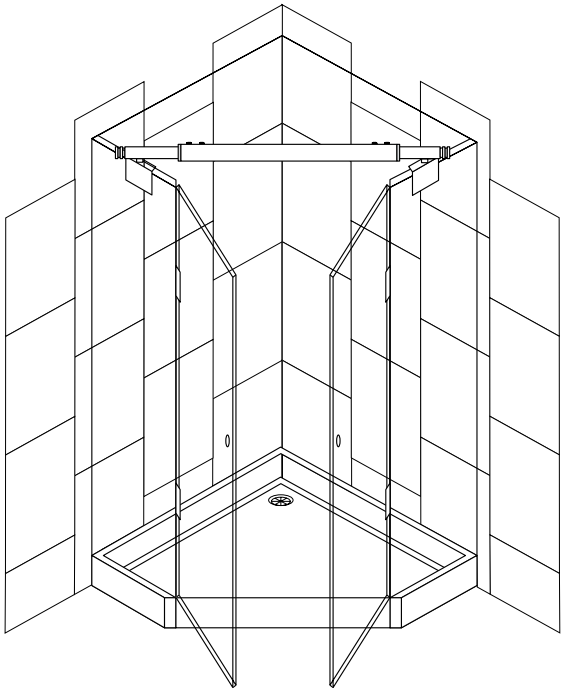

SHOWER SUPPORT BAR
SOLID BRASS - WALL TO GLASS

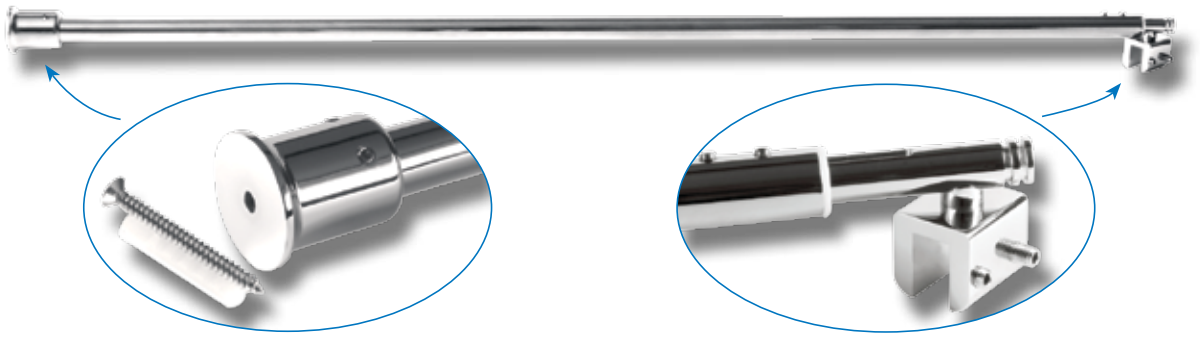

Application
Suitable for connecting glass to wall.
No glass drilling required.
Extendable from 970 - 1150 mm.
Glass thickness 8 - 10 mm.

Material
Brass

1 support bar consists of:
1 bar ø19 x 970 - 1150 mm
w/2 tightening screws 2,5 mm hex
1 wall mounting rosette ø37 mm
w/2 tightening screws 2,5 mm hex
1 L-shaped hex key 2,5 mm
1 wall plug
1 wall screw
1 glass mounting bracket 30 X 26 mm
w/2 tightening screws 3 mm hex
1 L-shaped hex key 3 mm
2 transparent cushions 1 mm thickness

Finish
Chrome plated # 15.24.020

Packing
10 pcs per cartoon

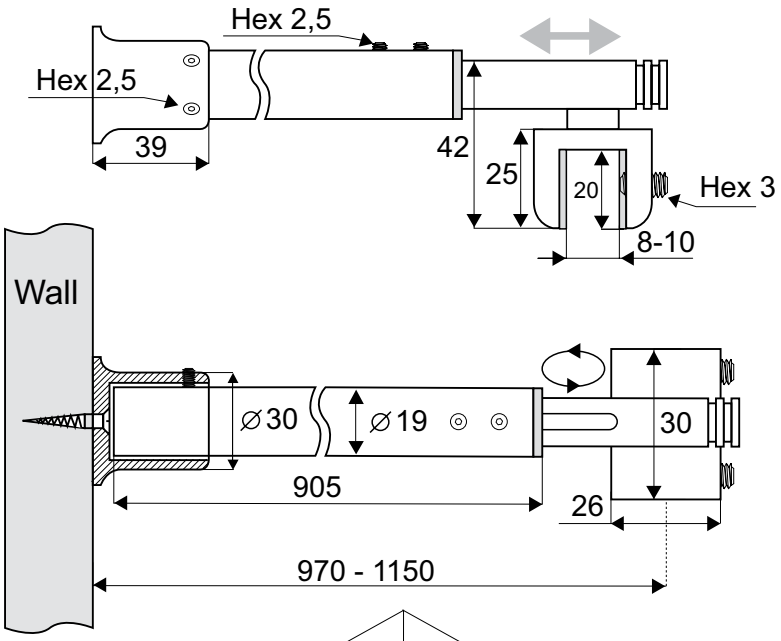

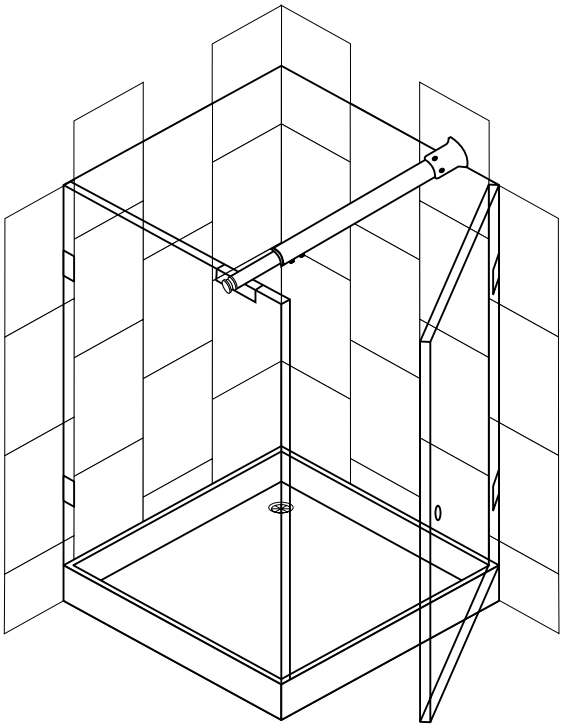

SHOWER SUPPORT BAR
WALL TO GLASS 45° ANGLE

- high quality furniture fittings

SISO DENMARK

Application
Suitable for connecting glass to wall.
No glass drilling required.
Extendable from 240 - 400 mm
Glass thickness 8 - 10 mm

Material
Brass

1 support bar consists of:
1 bar ø19 x 240 to 400 mm
w/2 tightening screws 2,5 mm hex
1 wall mounting bracket 45° angle
w/1 tightening screws 2,5 mm hex
1 L-shaped hex key 2,5 mm
1 wall screw
1 wall plug
1 glass mounting bracket 30 x 25 mm
w/2 tightening screws 4 mm hex
1 L-shaped hex key 4 mm
1 transparent cushions 1 mm thick

Finish
Chrome plated

Item No: # 15.24.025

Packing
20 pcs per cartoon

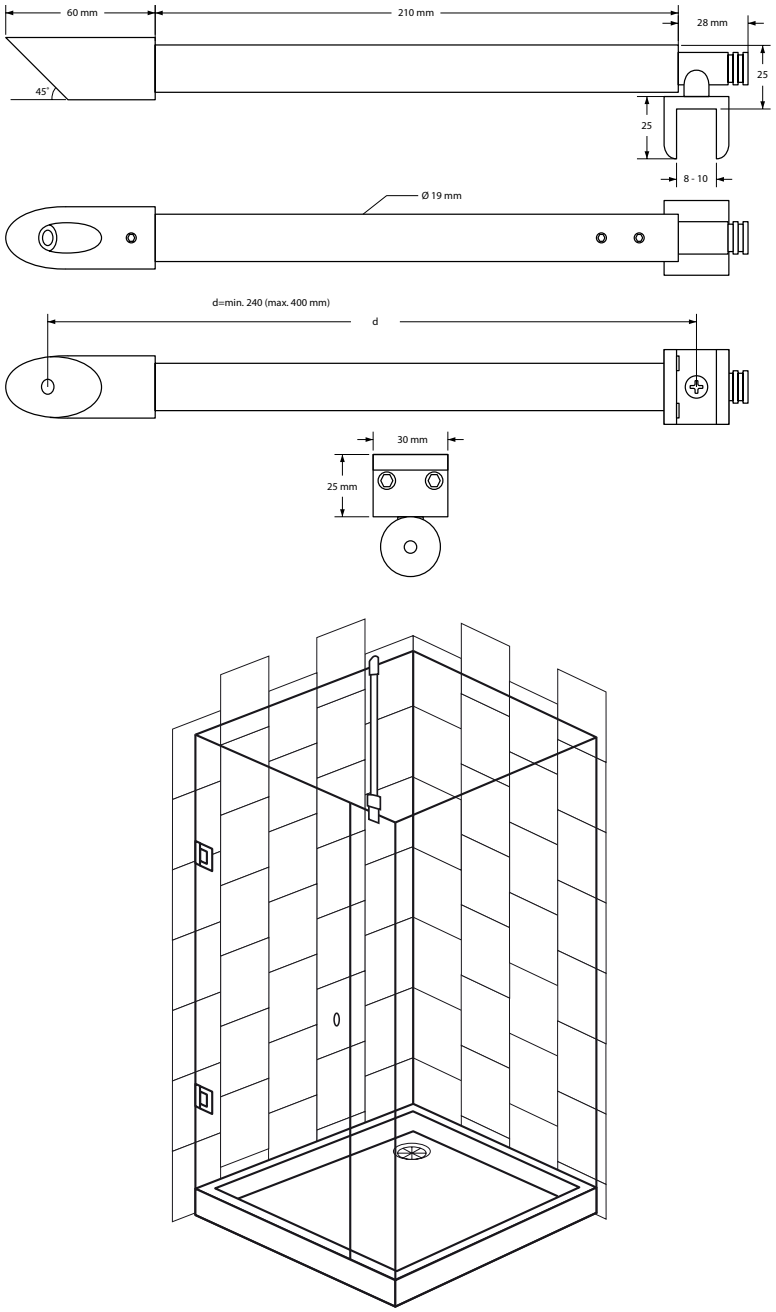

BAR TO GLASS BRACKET W/OPEN BAR HOLE

Application
Connection fitting for shower bars
No drilling required
For ø19 mm bar
Glass thickness 8 - 10 mm

Material
Brass

Finish
Chrome plated # 15.24.103

Inclusive
1 hex key 2,5 mm
1 transparent cushion 1 mm thickness

Packing
60 pcs per carton

Optional
Shower bar brass, CPL
ø19 x 1000 mm # 15.24.120
ø19 x 1300 mm # 15.24.121

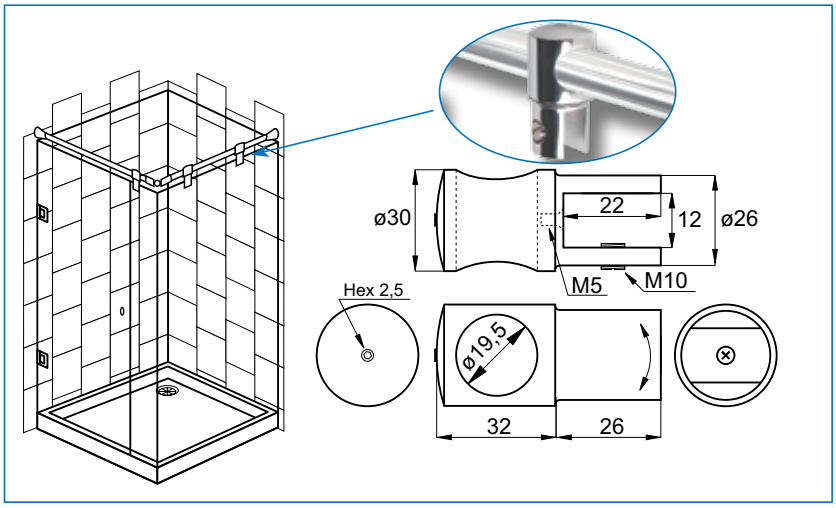

BAR TO GLASS END BRACKET W/CLOSED BAR HOLE

Application
Connection fitting for shower bars
No drilling required
For ø19 mm bar
Glass thickness 8 - 10 mm

Material
Brass

Finish
Chrome plated # 15.24.102

Inclusive
1 hex key 2,5 mm
1 transparent cushion 1 mm thickness

Packing
60 pcs per carton

Optional
Shower bar brass, CPL
ø19 x 1000 mm # 15.24.120
ø19 x 1300 mm # 15.24.121

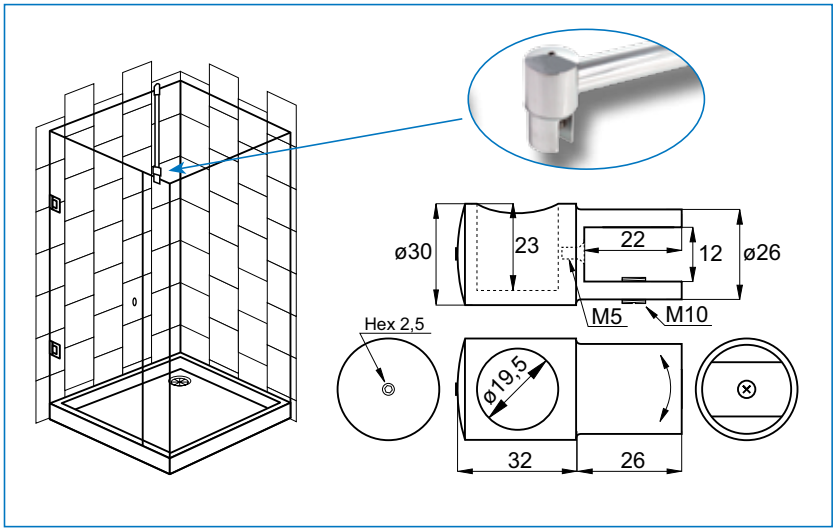

BAR TO WALL BRACKET W/45° ANGLE

Application
Connection fitting for shower bars
No drilling required
For ø19 mm bar

Material
Brass

Finish
Chrome plated # 15.24.101

Inclusive
1 hex key 2,5 mm
1 wall plug
1 wall screw

Packing
60 pcs per carton

Optional
Shower bar brass, CPL
ø19 x 1000 mm # 15.24.120
ø19 x 1300 mm # 15.24.121

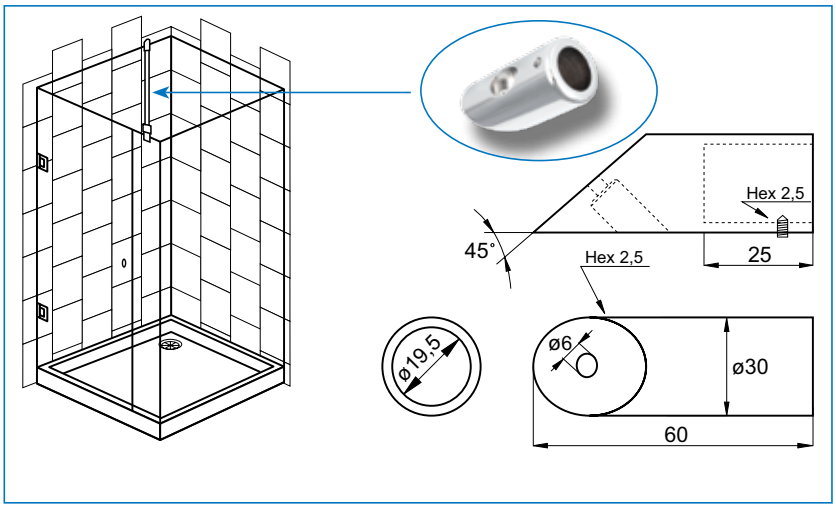

BAR TO WALL BRACKET W/FLAT BACK

Application
Connection fitting for shower bars
No drilling required
For ø19 mm bar

Material
Brass

Finish
Chrome plated # 15.24.100

Inclusive
1 hex key 2,5 mm
1 wall plug
1 wall screw

Packing
60 pcs per carton

Optional
Shower bar brass, CPL
ø19 x 1000 mm # 15.24.120
ø19 x 1300 mm # 15.24.121

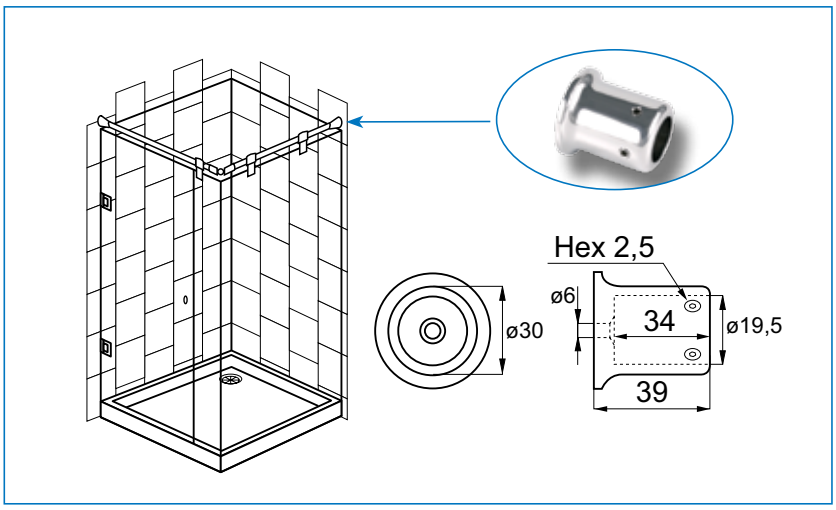

BAR TO BAR BRACKET
T-SHAPED F/3 BAR CONNECTION

Application
Connection fitting for shower bars
No drilling required
For ø19 mm bar
90º connection

Material
Brass

Finish
Chrome plated # 15.24.105

Inclusive
1 hex key 2,5 mm

Packing
10 pcs per carton

Optional
Shower bar brass, CPL
ø19 x 1000 mm # 15.24.120
ø19 x 1300 mm # 15.24.121

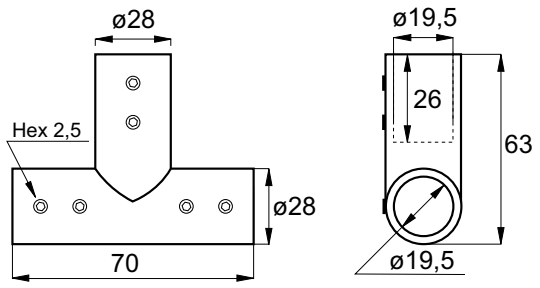

BAR TO BAR BRACKET
W/SWIVEL LINKAGE

Application
Connection fitting for shower bars
No drilling required
For ø19 mm bar
Adjusted to any degree

Material
Brass

Finish
Chrome plated # 15.24.104

Inclusive
1 hex key 2,5 mm
1 hex key 5 mm

Packing
20 pcs per carton

Optional
Shower bar brass, CPL
ø19 x 1000 mm # 15.24.120
ø19 x 1300 mm # 15.24.121

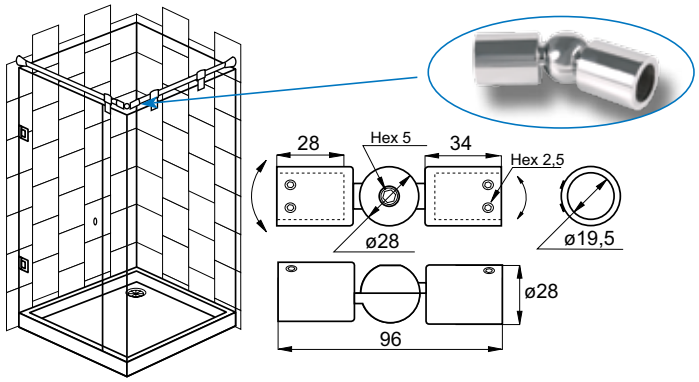

BAR TO BAR CONNECTOR 90°

Application
Connection fitting for shower bars
No drilling required
90° connection
F/ø19mm tubes

Material
Brass

Finish
Chrome plated # 15.24.107

Packing
40 pcs per carton

Optional
Shower bar brass, CPL
Ø19 x 1000 mm #15.24.120
Ø19 x 1300 mm #15.24.121

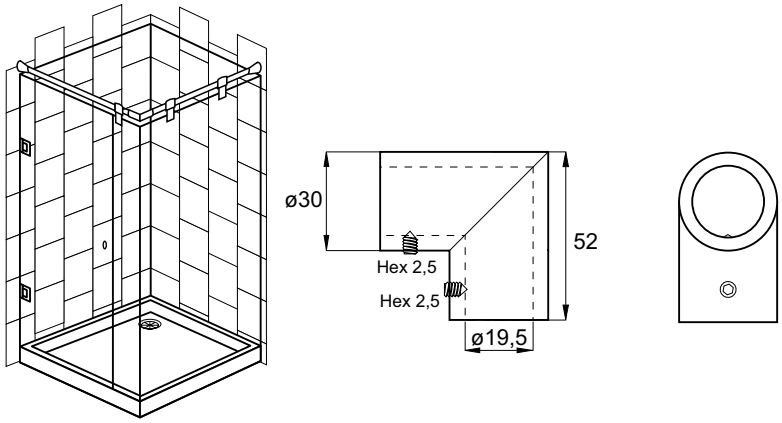

GLASS TO BAR CEILING CONNECTOR

Application
Connection fitting for shower bars
No drilling required
F/glass thickness 8 – 10 mm
F/ø19mm tubes

Material
Brass

Finish
Chrome plated # 15.24.108

Packing
40 pcs per carton

Optional
Shower bar brass, CPL
Ø19 x 1000 mm #15.24.120
Ø19 x 1300 mm #15.24.121

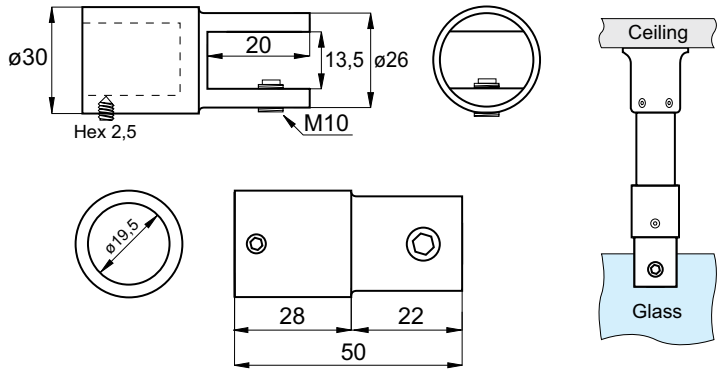

DOOR KNOB „WIEN“

Material
Brass

Size: ø30 x 31 mm
Bore hole: ø10 mm
Glass thickness: 6 - 12 mm

SS-look	# 15.24.046
Chrome plated	# 15.24.045
Alu-finish	# 15.24.047

Packing
60 pairs per carton

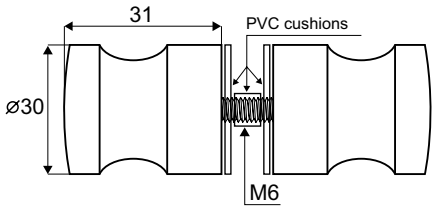

DOOR KNOB „CORK“

Material
Brass

Size: ø28 x 30 mm
Bore hole: ø10 mm
Glass thickness: 6 - 12 mm

Chrome plated	# 15.24.065

Packing
60 pairs per carton

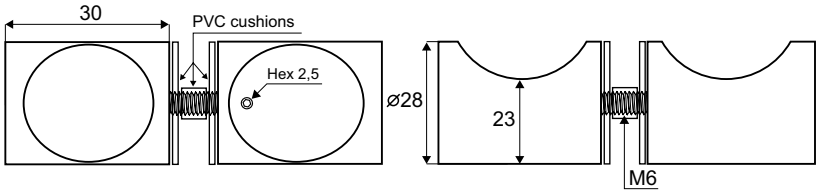

DOOR KNOB „PARIS“

Material
Brass

Size: ø35 x 42 mm
Bore hole: ø10 mm
Glass thickness: 6 - 12 mm

SS-look	# 15.24.081
Chrome plated	# 15.24.080
Alu-finish	# 15.24.082

Packing
30 pairs per carton

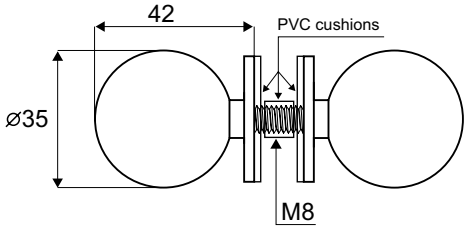

DOOR KNOB „OSLO“

Material
Brass

Size: 25 x 25 mm
Bore hole: ø10 mm
Glass thickness: 6 - 12 mm

SS-look	# 15.24.035
Chrome plated	# 15.24.036
Alu-finish	# 15.24.037

Packing
60 pairs per carton

Not for sale in Germany

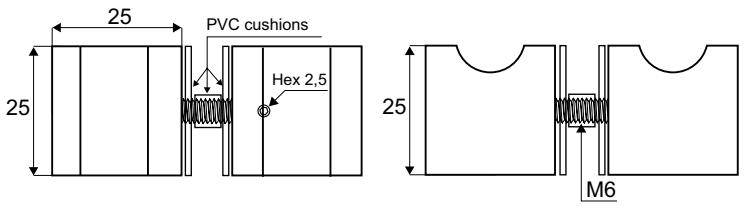

DOOR KNOB „PORTO“

Material
Brass

Size: ø28 x 28 mm
Bore hole: ø10 mm
Glass thickness: 6 - 12 mm

SS-look	# 15.24.041
Chrome plated	# 15.24.040
Alu-finish	# 15.24.042

Packing
60 pairs per carton

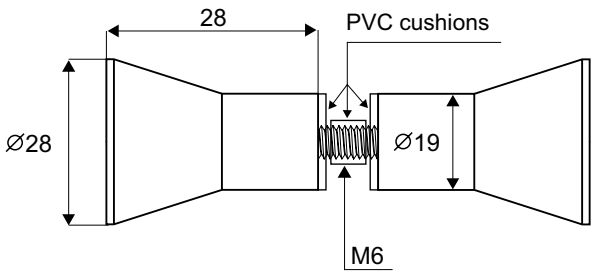

DOOR KNOB „HAAG“

Material
Brass

Size: ø28 x 31 mm
Bore hole: ø10 mm
Glass thickness: 6 - 12 mm

SS-look	# 15.24.030
Chrome plated	# 15.24.031
Alu-finish	# 15.24.032

Packing
60 pairs per carton

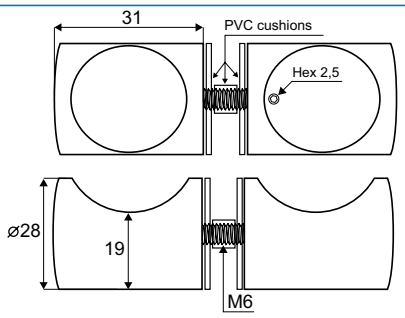

DOOR KNOB „LYON“

Material
Brass

Size: ø19 x 32 mm
Bore hole: ø10 mm
Glass thickness: 6 - 12 mm

SS-look	# 15.24.086
Chrome plated	# 15.24.085
Alu-finish	# 15.24.087

Packing
60 pairs per carton

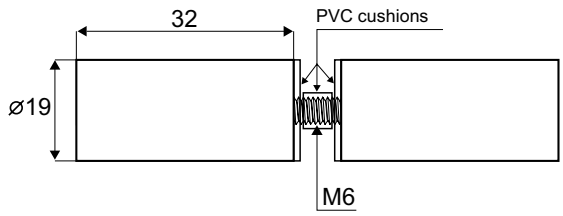

DOOR KNOB „KIEL“

Material
Brass

Size: ø39 x 16 mm
Bore hole: ø14 mm
Glass thickness: 6 - 12 mm

Chrome plated	# 15.24.090

Packing
60 pairs per carton

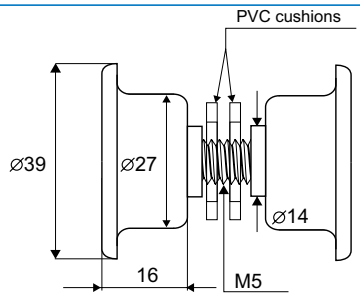

DOOR KNOB „EUTIN“

Material
Brass

Size: ø30 x 42 mm
Bore hole: ø10 mm
Glass thickness: 6 - 12 mm

Chrome plated	# 15.24.095

Packing
60 pairs per carton

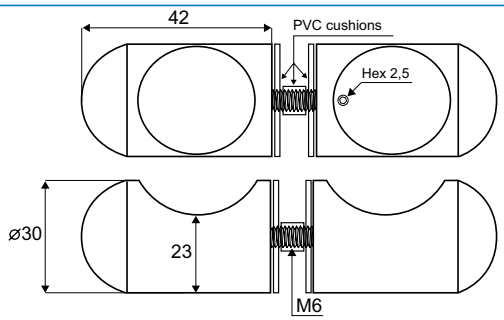

DOOR BAR HANDLE LOCKS SS-304
F/GLASS DOORS

- high quality furniture fittings

Application
For locking of glass doors by use of key or turn knob. Suitable for 8-12 mm glass

Specifications
Bar handle ø 35 x 1500 mm
Incl. floor socket w/spring dust cover
Cylinder with 5 SISO metal keys or turn knob
5000 KD on cylinder version

Material
Stainless steel SS-304 - brushed

Item No:

W/cylinder & knob	# 14.60.600
W/knob on one side	# 14.60.610
W/cylinder on 2 sides	# 14.60.615

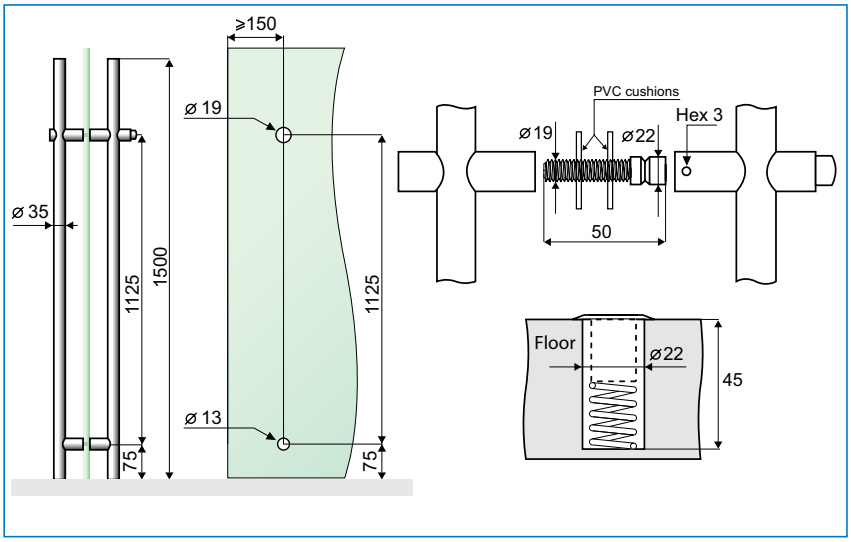

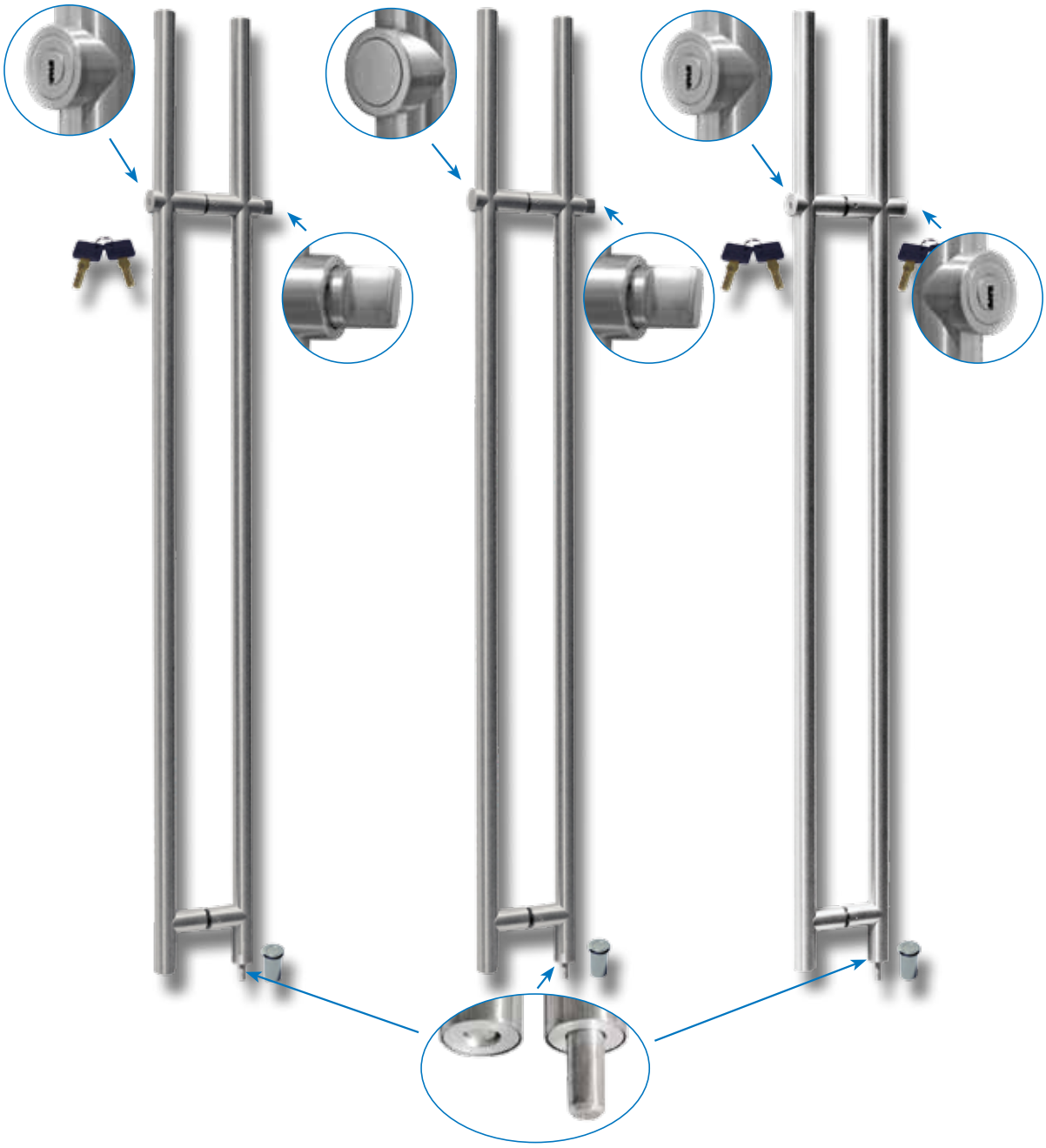

DOOR BAR HANDLE SS-304 „ODER“

Application
For glass doors
Drilling required

Material
Hollow stainless steel tube 304, brushed

Bore hole: ø12 mm
Glass thickness: 8 - 12 mm

Bar: ø 25 x 300 mm. Leg: ø19 mm.
c.c: 200 mm. # 17.87.000

Bar: ø 30 x 450 mm. Leg: ø22 mm.
c.c: 300 mm. # 17.87.010

Bar: ø 30 x 600 mm. Leg: ø22 mm.
c.c: 400 mm. # 17.87.020

Inclusive transparent tube & washers

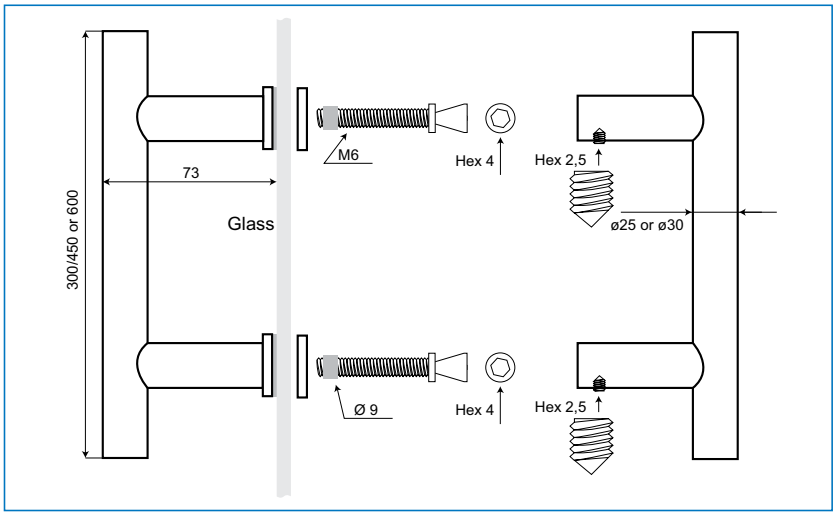

DOOR D-HANDLE SS-304 „MAIN“

Application
For glass doors
Drilling required

Material
Hollow stainless steel tube 304

Bore hole: ø12 mm
Glass thickness: 8 - 12 mm

ø25 x 330 mm, c.c.: 305 mm, H: 74 mm
Polished # 17.87.090
Brushed # 17.87.091

ø25 x 465 mm, c.c.: 450 mm, H: 74 mm
Polished # 17.87.094
Brushed # 17.87.095

ø32 x 620 mm, c.c.: 600 mm, H: 82 mm
Polished # 17.87.101
Brushed # 17.87.102

Inclusive transparent tube & washers

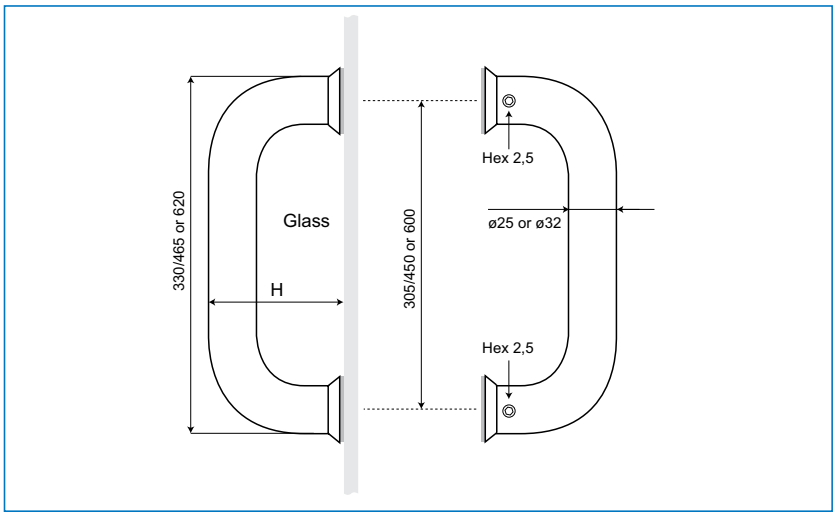

DOOR HANDLE SS-304 "MOSEL"

- high quality furniture fittings

Application:
For glass doors
Drilling required

Material:
Hollow stainless steel tube 304, brushed

Bore hole: ø 12 mm
Glass thickness: 8 -12 mm

Ø 25 x 330 mm c.c.: 305 mm
Polished # 17.87.105
Brushed # 17.87.106

Inclusive transparent tube & washers

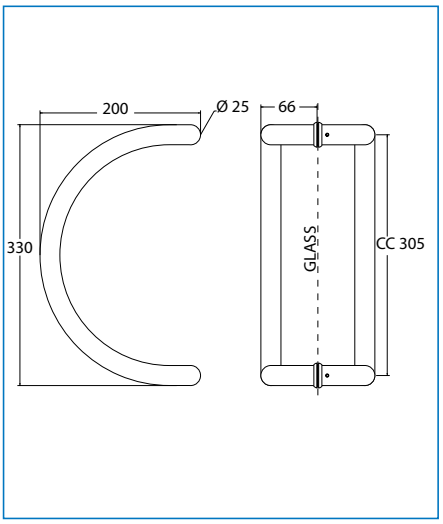

DOOR HANDLE SS-304 "VOLGA"

Application:
For glass doors
Drilling required

Material:
Hollow stainless steel tube 304, brushed

Bore hole: ø 12 mm
Glass thickness: 8 -12 mm

Ø 25 x 330 mm c.c.: 305 mm
Polished # 17.87.109
Brushed # 17.87.110

Inclusive transparent tube & washers

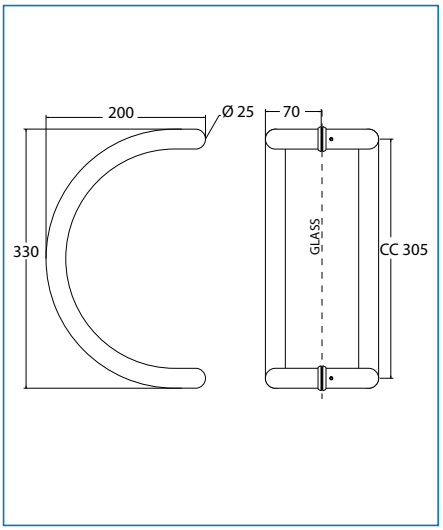

DOOR HANDLE SS-304 "PO"

Application:
For glass doors
Drilling required

Material:
Hollow stainless steel tube 304, brushed

Bore hole: ø 12 mm
Glass thickness: 8 -12 mm

Ø 25 x 225 mm c.c.: 200 mm
Polished # 17.87.119
Brushed # 17.87.120

Inclusive transparent tube & washers

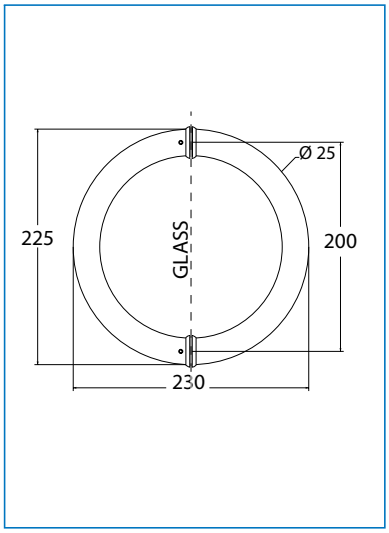

PVC SEALS FOR SHOWER DOORS 6 - 12 MM GLASS

Glass to Floor S-5701

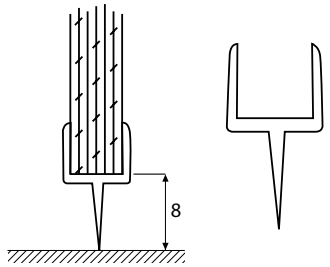

6 mm	2,5 meter	15.22.260
8 mm	2,5 meter	15.22.261
10 mm	2,5 meter	15.22.262
12 mm	2,5 meter	15.22.263

Glass to Floor S-5702

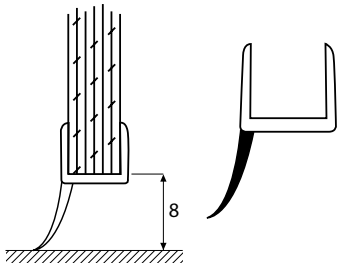

6 mm	2,5 meter	15.22.265
8 mm	2,5 meter	15.22.266
10 mm	2,5 meter	15.22.267
12 mm	2,5 meter	15.22.268

Glass to Glass S-5703

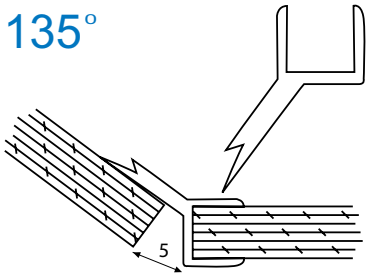

6 mm	2,5 meter	15.22.270
8 mm	2,5 meter	15.22.271
10 mm	2,5 meter	15.22.272
12 mm	2,5 meter	15.22.273

Glass to Glass S-5704

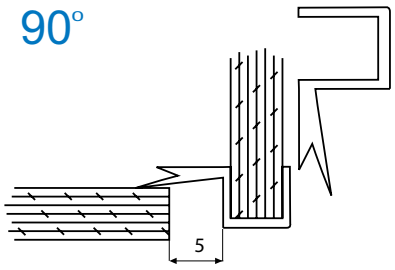

6 mm	2,5 meter	15.22.275
8 mm	2,5 meter	15.22.276
10 mm	2,5 meter	15.22.277
12 mm	2,5 meter	15.22.278

Glass to Glass S-5705

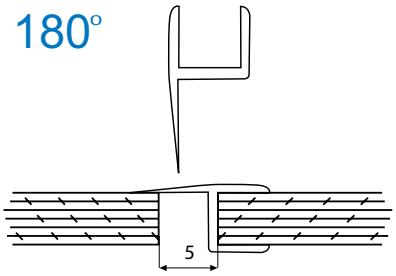

6 mm	2,5 meter	15.22.280
8 mm	2,5 meter	15.22.281
10 mm	2,5 meter	15.22.282
12 mm	2,5 meter	15.22.283

Glass to Glass S-5706

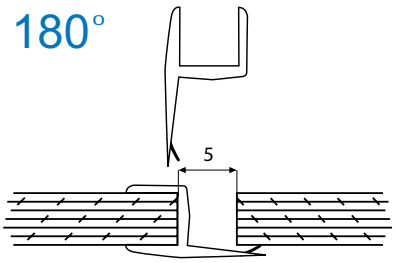

6 mm	2,5 meter	15.22.285
8 mm	2,5 meter	15.22.286
10 mm	2,5 meter	15.22.287
12 mm	2,5 meter	15.22.288

Glass to Floor S-5707

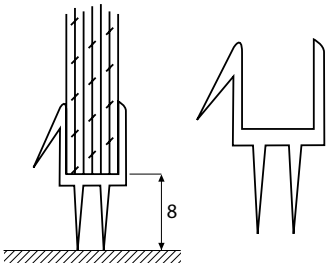

6 mm	2,5 meter	15.22.290
8 mm	2,5 meter	15.22.291
10 mm	2,5 meter	15.22.292
12 mm	2,5 meter	15.22.293

Glass to Floor S-5708

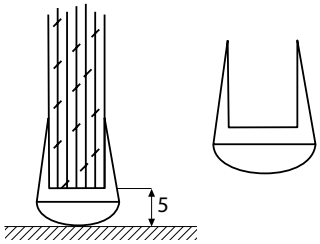

6 mm	2,5 meter	15.22.295
8 mm	2,5 meter	15.22.296
10 mm	2,5 meter	15.22.297
12 mm	2,5 meter	15.22.298

Glass to Floor S-5709

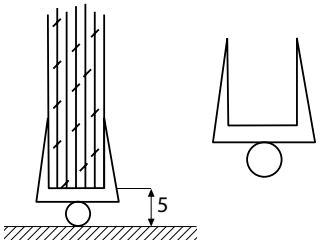

6 mm	2,5 meter	15.22.300
8 mm	2,5 meter	15.22.301
10 mm	2,5 meter	15.22.302
12 mm	2,5 meter	15.22.303

Glass to Glass S-5711

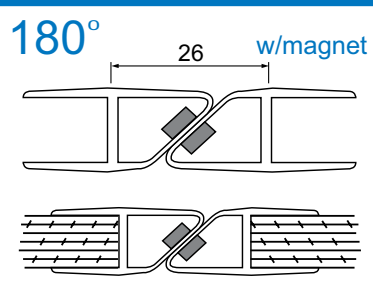

6 mm	2,5 meter	15.22.305
8 mm	2,5 meter	15.22.306
10 mm	2,5 meter	15.22.307
12 mm	2,5 meter	15.22.308

Glass to Glass S-5712

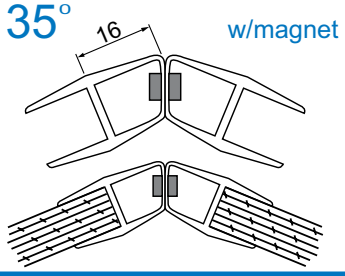

6 mm	2,5 meter	15.22.310
8 mm	2,5 meter	15.22.311
10 mm	2,5 meter	15.22.312
12 mm	2,5 meter	15.22.313

Glass to Glass S-5713

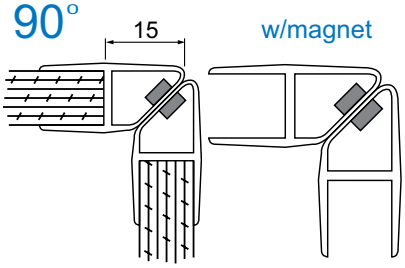

6 mm	2,5 meter	15.22.315
8 mm	2,5 meter	15.22.316
10 mm	2,5 meter	15.22.317
12 mm	2,5 meter	15.22.318

Packing: 100 pcs per export carton

Application
For sliding glass doors in shower, offices' or shops
Drilling required

Features
8 - 10 mm glass thickness

Material
Stainless steel 304

Max door load: 120 KG

1 set for door width 960 - 1060 mm consists of
1 tube ø25 x 2050 mm
2 x end pieces for ø25 tube
2 x door stoppers
2 x sliding rollers
1 x floor guide
1 x installation drawing

Item No.: # 28.29.001

To be ordered separately:
Tube/wall bracket (5 pieces recommended) # 28.29.010

Wall/tube bracket - LAY-ON f/ø25 mm (5 pieces recommended) # 28.29.008

Tube/glass bracket (5 pieces recommended) # 28.29.011

Glass/tube bracket - LAY-ON f/ø25 mm (5 pieces recommended) # 28.29.009

Side-wall mounting bracket f/ø25 mm tube # 28.29.012

Sliding glass door pull ø 65mm Bore ø50mm # 28.29.019

Mounting tool for snake eye screws: # 28.29.020

28.29.010

28.29.019

28.29.011

28.29.012

28.29.008

28.29.009

28.29.020

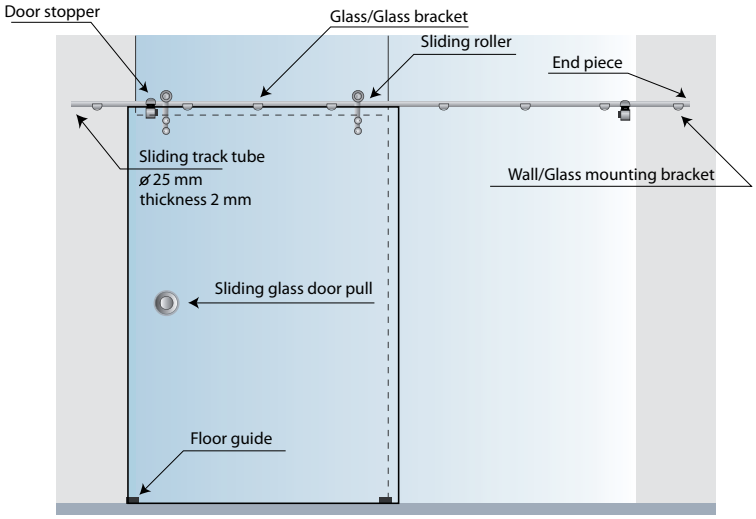

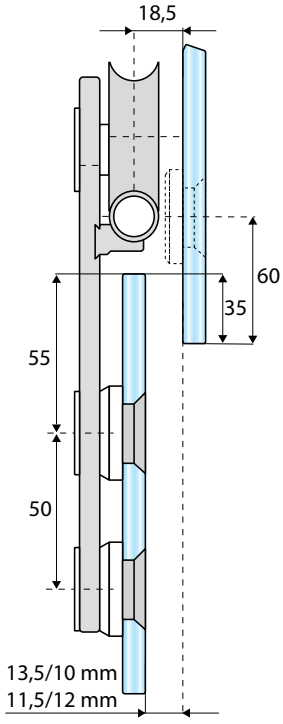

ALUMINIUM U-CHANNELS FOR GLASS

Describtion:
U-channel for 6, 8, 10 or 12 mm glass

Material: Aluminium

Size (W/H/T):
F/6 mm glass (8 x 12 x 6 mm)
F/8 mm glass (10 x 12 x 8 mm)
F/10 mm glass (14,2 x 19 x 10,2 mm)
F/12 mm glass (17,2 x 19 x 13,2 mm)

Item No.:

F/6 mm glass, mirror chrome plated, 2,3 meters	# 15.22.499
F/6 mm glass, polished aluminium, 2,5 meters	# 15.22.500
F/6 mm glass, brushed aluminium, 2,5 meters	# 15.22.501
F/8 mm glass, mirror chrome plated, 2,3 meters	# 15.22.504
F/8 mm glass, polished aluminium, 2,5 meters	# 15.22.505
F/8 mm glass, brushed aluminium, 2,5 meters	# 15.22.506
F/10 mm glass, mirror chrome plated, 2,3 meters	# 15.22.509
F/10 mm glass, polished aluminium, 2,5 meters	# 15.22.510
F/10 mm glass, brushed aluminium, 2,5 meters	# 15.22.511
F/12 mm glass, mirror chrome plated, 2,3 meters	# 15.22.514
F/12 mm glass, polished aluminium, 2,5 meters	# 15.22.515
F/12 mm glass, brushed aluminium, 2,5 meters	# 15.22.516

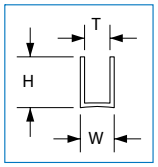

Brushed aluminium

Mirror chrome plated

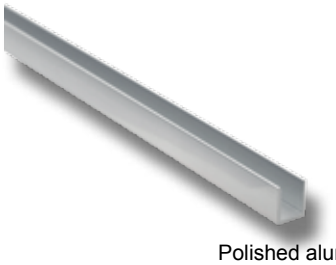

Polished aluminium

GLASS CALCULATION

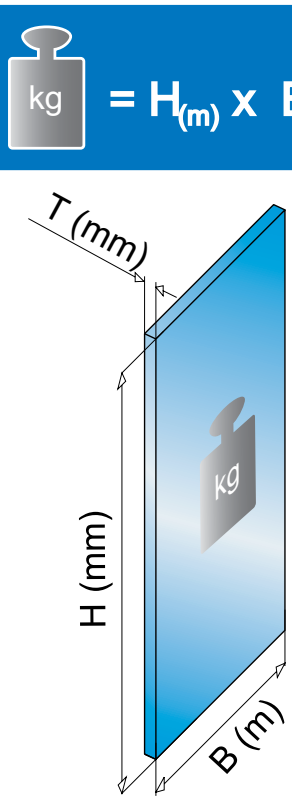

$$\text{kg} = H_{(m)} \times B_{(m)} \times 2{,}5 \times T_{(mm)}$$

H = m
B = m
T = mm!

Example
H = 1,9 m
B = 1,2 m
T = 12 mm

1,9 x 1,2 x 2,5 x 12 = **68,4 kg**

TOWEL SHELF W/BAR

- high quality furniture fittings

Material: Stainless steel 304
Finish: Polished
Size: Feet: ø 18 x 90 mm & ø 18 x 200 mm
Bars: ø 12 x 610 mm
Box packing: 1 pce.
incl. screws, hex key & wall plugs
Export packing: 5 pcs.
Item No. # 17.73.010

TOWEL BAR - SINGLE

Material: Stainless steel 304
Finish: Polished
Size: Feet: ø 18 x 65 mm
Bar: ø 12 x 610 mm
Blister packing: 1 pce.
incl. screws, hex key & wall plugs
Export packing: 20 pcs.
Item No. # 17.73.015

TOWEL BAR - DOUBLE

Material: Stainless steel 304
Finish: Polished
Size: Feet: ø 18 x 120 mm
Bars: ø 12 x 610 mm

Blister packing: 1 pce.
incl. screws, hex key & wall plugs
Export packing: 20 pcs.
Item No. # 17.73.020

TOWEL HOOK W/GRIP

Material: Stainless steel 304
Finish: Polished
Size: ø 16 x 32 mm

Blister packing: 1 pair
incl. screws, hex key & wall plugs
Export packing: 20 pairs
Item No. # 17.73.105

TOWEL HOOK W/PIN

Material: Stainless steel 304
Finish: Polished
Size: ø 16 x 32 mm
Blister packing: 1 pair
incl. screws, hex key & wall plugs
Export packing: 20 pairs
Item No. # 17.73.100

TOILET ROLL HOLDER

Material: Stainless steel 304
Finish: Polished
Size: Feet: ø 18 x 65 mm
Wire: ø 10 mm
Blister packing: 1 pce.
incl. screws, hex key & wall plugs
Export packing: 20 pcs.
Item No. # 17.73.000

TOILET BRUSH WITH HOLDER

Material: Stainless steel 304
Finish: Polished
Size: Holder: 120 x 142 mm
Box packing: 1 set
incl. screws, hex key & wall plugs
Export packing: 10 sets
Item No. # 17.73.030

MOUNTING METHOD

SAME MOUNTING METHOD FOR ALL PRODUCTS

Application
Complete solution for construction of toilet cubicles.
Ideal for toilets in public swimming baths, airports, locker rooms or gas stations.
Made of black, grey or white polypropylene (PP).
Available for right hand & left hand doors.
For wall thickness 16 - 18 mm.

On set consists of
2 handles
1 hook
1 lock
12 angle brackets w/cover caps
2 hinges
2 stands w/cover caps

Item No.:

Black right hand	# 22.23.050
Grey right hand	# 22.23.051
White right hand	# 22.23.052
Black left hand	# 22.23.060
Grey left hand	# 22.23.061
White left hand	# 22.23.062

Other colours & material on request.

Packing
20 sets pr. export carton

TOILET CUBICLE FITTINGS IN SS304
F/OVERLAY DOORS

Application
Complete solution for construction of toilet cubicles.
Ideal for toilets in public swimming baths, airports, locker rooms or gas stations.
Made of stainless steel 304
Available for right hand & left hand doors.
For wall thickness 10 - 18 mm

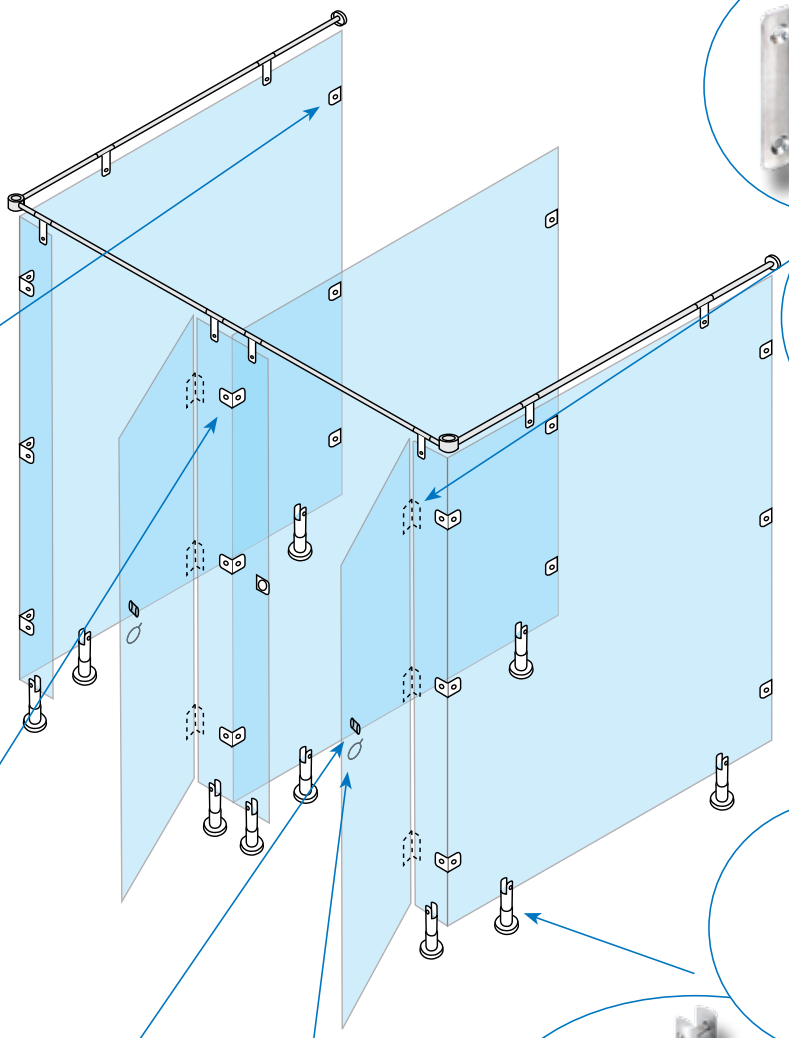

U-BRACKET
Size: 57 x 40 x 18 mm
Incl. plugs & screws for wall & panel mounting
For panel thickness 10 - 18 mm
Item No. # 22.23.130

LIFT DOOR HINGES
Features:
F/overlay doors.
Outwards opening.
Self closing by up/down function
F/ 10 - 18 mm panels
Size: 90 x 75 x 2,5 mm
Incl. screws for panel mounting
Item No.
Right hand # 22.23.160
Left hand # 22.23.161

L-BRACKET
Size: 50 x 50 mm
Incl. plugs & screws
for wall & panel mounting
Item No. # 22.23.125

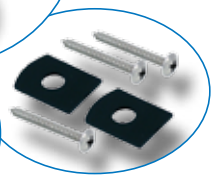

DOOR KNOB
Size: ø 25 x 40 mm
For panel thickness 10 - 18 mm
Item No. # 22.23.135

TURN & RELEASE HANDLE
f/overlay doors
Features:
W/indicator showing if door us open or closed.
To be installed on the door
F/10 - 18 mm panel thickness
Size: ø 50 mm
Item No. # 22.23.150

PANEL SUPPORT LEG
Size: ø 28 x 140 mm
Incl. spacers for adjustment of panel thickness from 10 - 18 mm
Floor & panel screws included
Item No. # 22.23.145

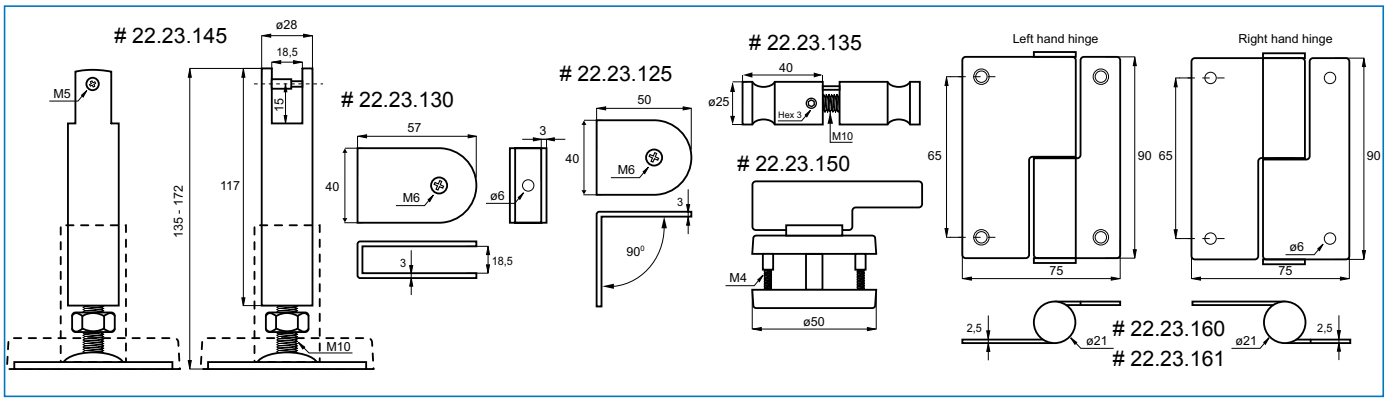

TOILET CUBICLE FITTINGS IN SS304
F/INSET DOORS

- high quality furniture fittings

SISO DENMARK

Application
Complete solution for construction of toilet cubicles.
Ideal for toilets in public swimming baths, airports, locker rooms or gas stations.
Made of stainless steel 304
Available for right hand & left hand doors.
For wall thickness 10 - 18 mm

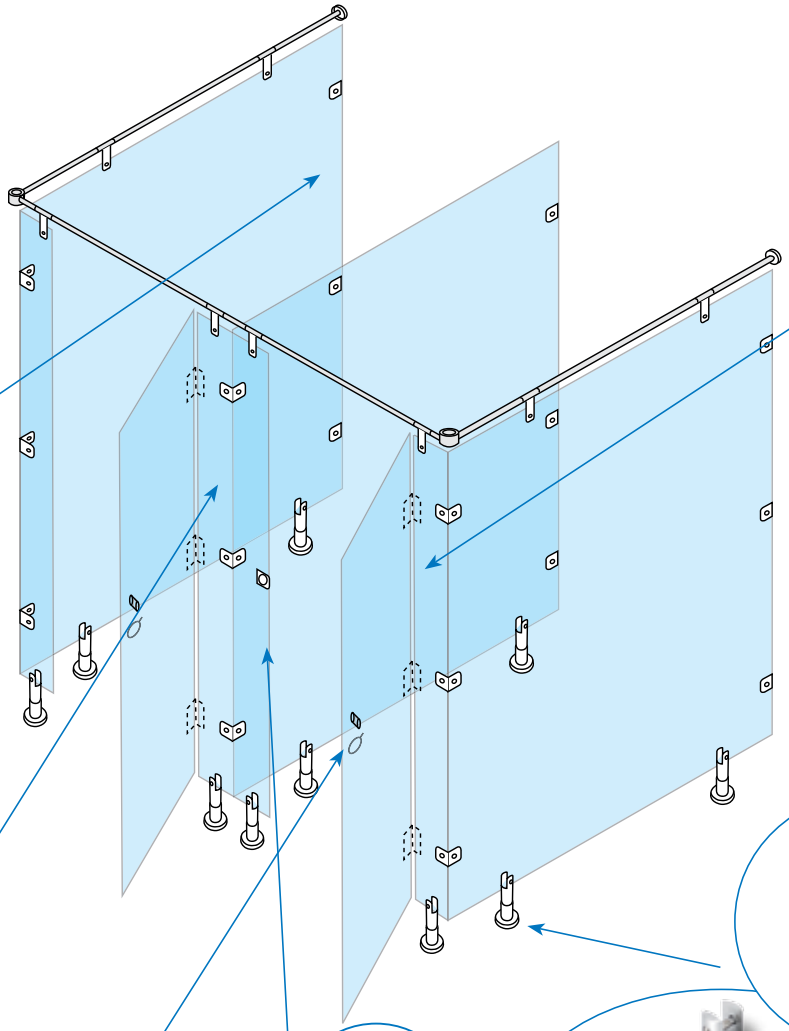

U-BRACKET
Size: 57 x 40 x 18 mm
Incl. plugs & screws for wall & panel mounting
For panel thickness 10 - 18 mm
Item No. # 22.23.130

SPRING DOOR HINGES
Features:
F/inset doors.
Inwards opening.
Self closing by spring function
F/ 10 - 18 mm panels
Size: 90 x 52 x 2 mm
Item No.:
Universal # 22.23.165
Incl. screws for panel mounting

L-BRACKET
Size: 50 x 50 mm
Incl. plugs & screws
for wall & panel mounting
Item No. # 22.23.125

DOOR KNOB
Size: ø 25 x 40 mm
For panel thickness 10 - 18 mm
Item No. # 22.23.135

Turn & Release handle f/inset doors
Features:
W/indicator showing if door us open or closed.
To be installed on side panel
F/10 - 18 mm panel thickness
Size: ø 50 mm
Item No. # 22.23.151

PANEL SUPPORT LEG
Size: ø 28 x 140 mm
Incl. spacers for adjustment of panel thickness from 10 - 18 mm
Floor & panel screws included
Item No. # 22.23.145

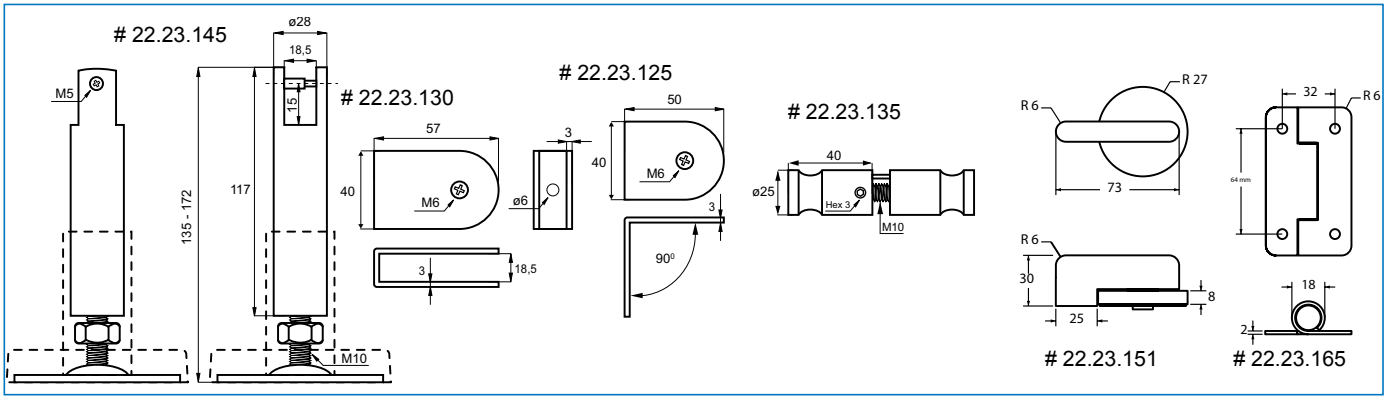

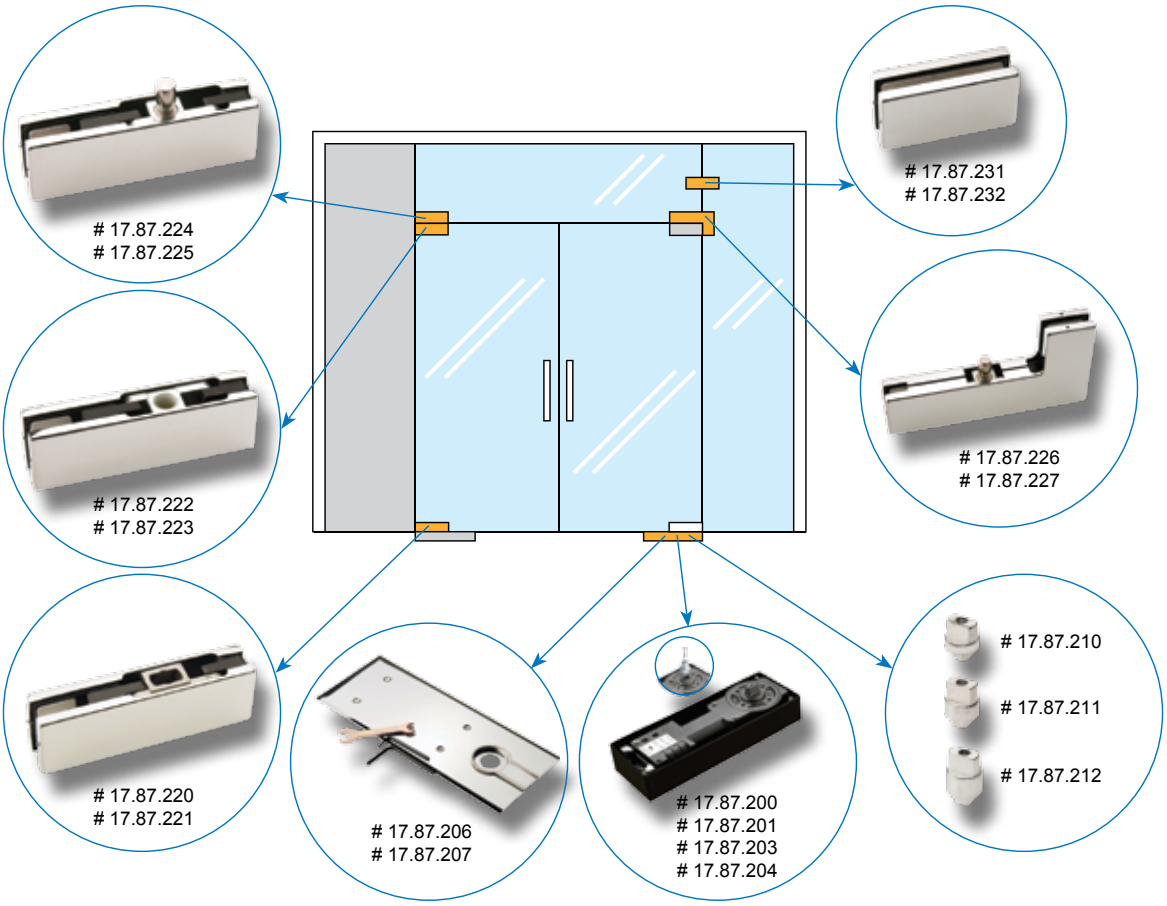

FLOOR SPRING "HEKLA"
+/- 116° OPENING

Features:
W/stop at +/- 90°
Adjustment of closing speed +/- 90° to +/- 25 – 0°
Floor spring box is 6 mm adjustable side to side & up/down
W/fixed or interchangeable spindle
Build-in decompression valve that prevents door from damage in case of strong wind
No cover plate

Material: Steel

Size: 50 x 313 x 125 mm
Max door width: 1100 mm
Max opening: +/- 116°
Max load: 135 kg
Cycles: 500.000

W/fixed 3 mm stainless steel spindle (excl. cover plate) # 17.87.200

w/interchangeable 3 mm stainless steel spindle (excl. cover plate) # 17.87.201

A	B	C	D	E	F	G
50	295	104	313	125	49	53-60

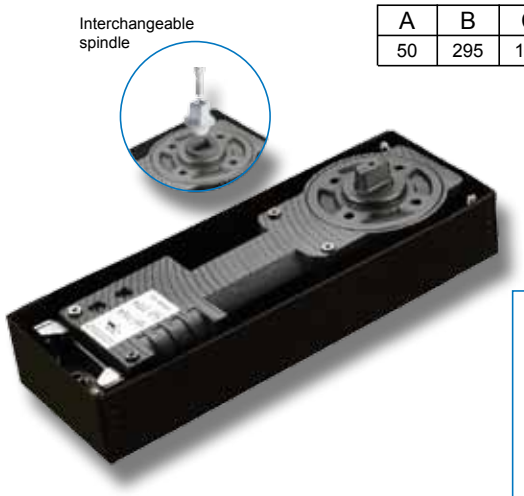

1 section adjust 90° -25° closing speed
2 section adjust 25° -0° closing speed

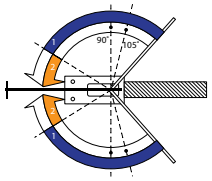

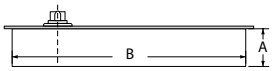

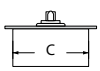

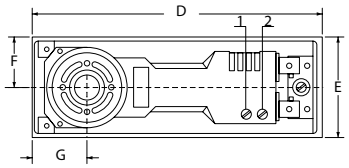

FLOOR SPRING "KATLA"
+/- 180° OPENING

- high quality furniture fittings

Features:
W/stop at +/- 90°. Over 90° stop at any point
Adjustment of closing speed +/- 90° to 25°
Floor spring box is 6 mm adjustable side to side & up/down
W/fixed or interchangeable spindle
Build-in decompression valve that prevents door from damage in case of strong wind
Especially suitable for double doors
No cover plate

Material: Steel
Size: 50 x 313 x 125 mm
Max door width: 1100 mm
Max opening: +/- 180°
Max load: 135 kg
Cycles: 500.000

W/fixed 3mm stainless steel spindle
(excl. cover plate) # 17.87.203

W/interchangeable 3 mm stainless steel spindle
(excl. cover plate) # 17.87.204

A	B	C	D	E	F	G
50	295	104	313	125	49	53-60

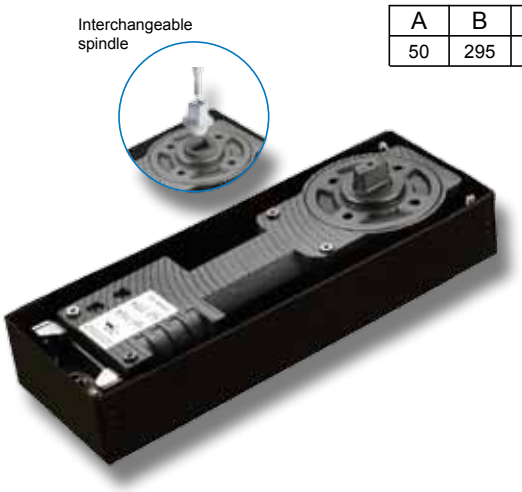

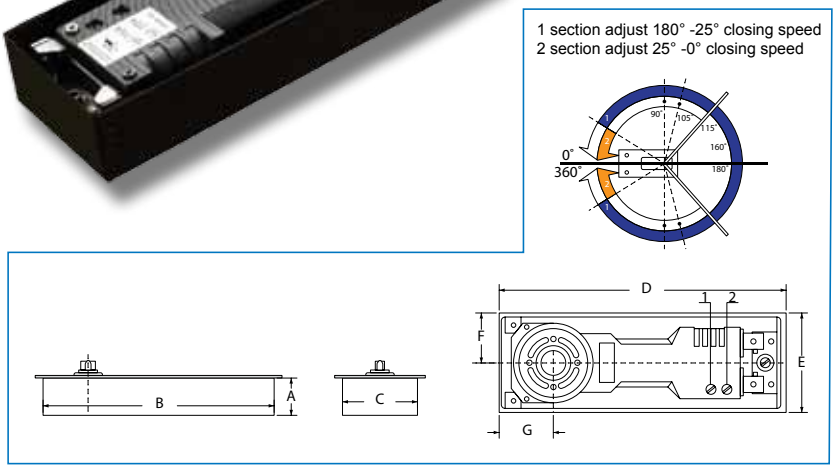

COVER PLATE SS-304 F/FLOOR SPRINGS "HEKLA & KATLA"

Feature:
Cover plate for floor springs

Material:
Stainless steel SS-304

Size: 311 x 124 x 1 mm (L/W/T)

Finish:
Polished # 17.87.206
Brushed # 17.87.207

INTERCHANGEABLE SPINDLES F/FLOOR SPRINGS "HEKLA & KATLA"

Feature:
Spindle for floor spring

Material: Steel

Size: 8, 13 or 18 mm

Item No.:
8 mm # 17.87.210
13 mm # 17.87.211
18 mm # 17.87.212

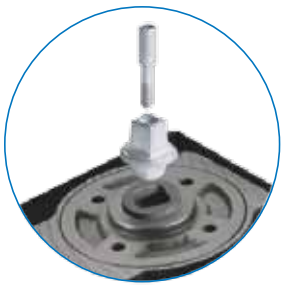

OVER PANEL GLASS CLAMP

Features:
Drilling required

Material: Aluminum body & SS-304 cover

Size: 51 x 103 x 33 – 35 mm (H/L/W)

Glass thickness: 10-12 mm glass

Finish:
Polished # 17.87.231
Brushed # 17.87.232

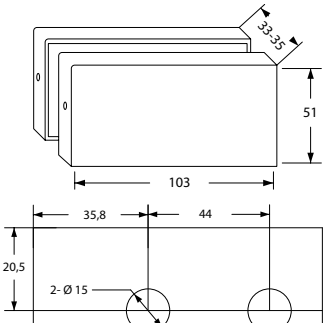

OVERPANEL CORNER PATCH FITTING

Features:
W/8mm horizontal adjustment
Cutting & drilling required

Material: Aluminum body & SS-304 cover

Size:
51 x 218 x 33 – 35 x 106 x 51 mm
(H/L/W/H/L)

Glass thickness: 10-12 mm glass

Finish:
Polished # 17.87.226
Brushed # 17.87.227

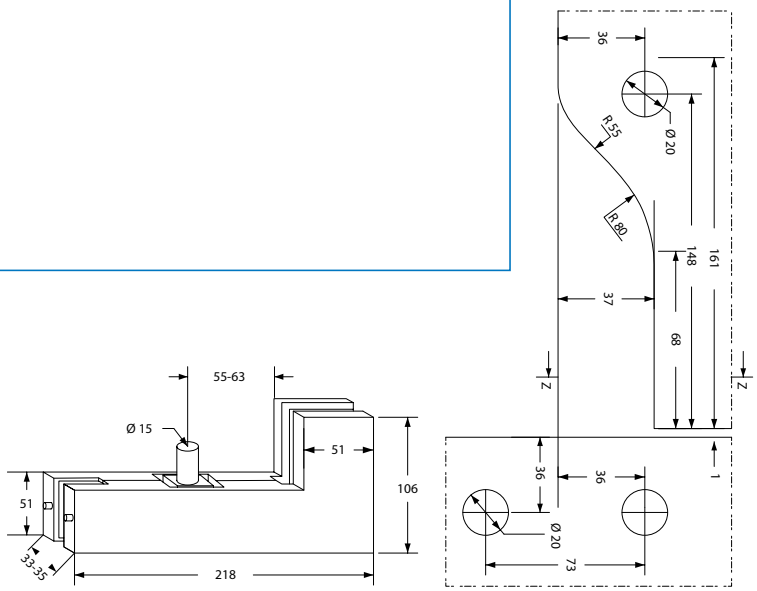

OVERPANEL PATCH FITTING

- high quality furniture fittings

Features:
W/ 8 mm horizontal adjustment
Cutting & drilling required

Material: Aluminum body & SS-304 cover

Size: 51 x 164 x 33 – 35 mm (H/L/W)

Glass thickness: 10-12 mm glass

Finish:
Polished # 17.87.224
Brushed # 17.87.225

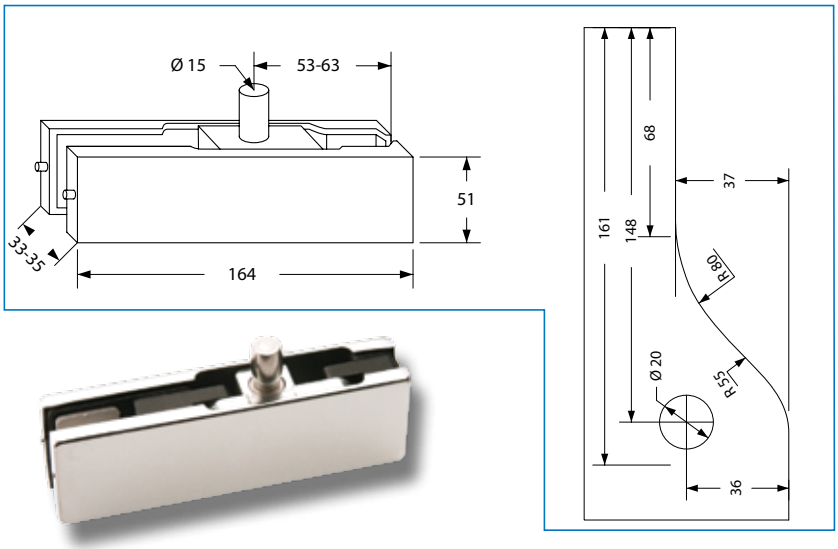

TOP PATCH FITTING

Features:
W/8mm horizontal adjustment
Cutting & drilling required

Material: Aluminum body & SS-304 cover

Size: 51 x 164 x 33 – 35 mm (H/L/W)

Glass thickness: 10-12 mm glass

Finish:
Polished # 17.87.222
Brushed # 17.87.223

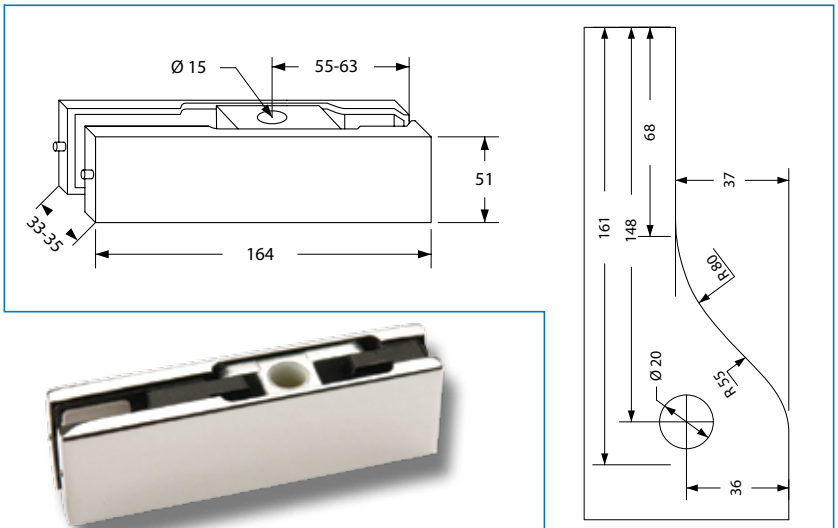

BOTTOM PATCH FITTING

Features:
W/8mm horizontal adjustment
Cutting & drilling required

Material: Aluminum body & SS-304 cover

Size: 51 x 164 x 33 – 35 mm (H/L/W)

Glass thickness: 10-12 mm glass

Finish:
Polished # 17.87.220
Brushed # 17.87.221

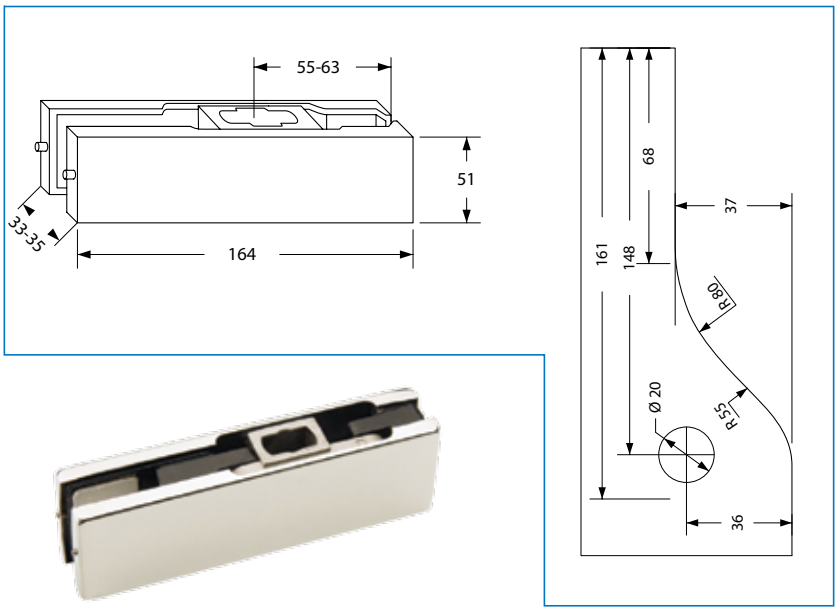

- high quality furniture fittings

Item No.: 99.00.020 15.05.2011

SISO A/S

Mileparken 11 Phone: (+45) 45 830 900
DK - 2740 Skovlunde (Copenhagen) Fax: (+45) 45 830 444
Denmark E-mail: siso@siso.dk Web: www.siso.dk